IAE ACADEMY INSTITUTE FOR ENGINEERS

GATE IN · 2026

IAE Academy free study material · Updated 20 October 2026

GATE IN 2026 Solved Paper

INSIDE

- All 65 questions, in the order of the paper
- The official answer to every question
- A step-by-step solution to every question
- The answer key on one page

Question paper and official answer key: IIT Guwahati

Online, with the questions linked to their topic notes: **iaeacademy.in/study/papers/in-2026**

FREE COUNSELLING

Preparing for GATE IN? Talk to IAE Academy.

Or call **+91 84204 36524**

Every day, 10:30 am to 7:30 pm

Chat on WhatsApp

Free. Not for sale. Pass it on.

About this paper

65 questions, 100 marks. Question types: 45 MCQ · 6 MSQ · 14 NAT.

Official answer key: IIT Guwahati · https://gate2026.iitg.ac.in/doc/download/2026/Keys/IN_Keys.pdf

We placed each question under a subject and topic ourselves; the exam paper does not label them.

This paper online, with the questions linked to their topic notes:
iaeacademy.in/study/papers/in-2026

Answer key

Q	TYPE	MARKS	ANSWER
Q.1	MCQ	1	**D**
Q.2	MCQ	1	**C**
Q.3	MCQ	1	**B**
Q.4	MCQ	1	**D**
Q.5	MCQ	1	**C**
Q.6	MCQ	2	**A**
Q.7	MCQ	2	**B**
Q.8	MCQ	2	**B**
Q.9	MCQ	2	**C**
Q.10	MCQ	2	**A**
Q.11	MCQ	1	**C**
Q.12	MCQ	1	**D**
Q.13	MCQ	1	**A**
Q.14	MCQ	1	**A**
Q.15	MCQ	1	**Marks to all**
Q.16	MCQ	1	**D**
Q.17	MCQ	1	**C**
Q.18	MCQ	1	**A**
Q.19	MCQ	1	**D**
Q.20	MCQ	1	**C**
Q.21	MCQ	1	**B**
Q.22	MCQ	1	**A**
Q.23	MCQ	1	**D**
Q.24	MCQ	1	**B**
Q.25	MCQ	1	**B**
Q.26	MCQ	1	**D**
Q.27	MCQ	1	**D**
Q.28	MCQ	1	**C**
Q.29	MSQ	1	**A, C**
Q.30	MSQ	1	**A**
Q.31	NAT	1	**1**
Q.32	NAT	1	**5**
Q.33	NAT	1	**25**
Q.34	NAT	1	**11**
Q.35	NAT	1	**63**
Q.36	MCQ	2	**C**
Q.37	MCQ	2	**A**
Q.38	MCQ	2	**C**
Q.39	MCQ	2	**B**
Q.40	MCQ	2	**B**
Q.41	MCQ	2	**B**
Q.42	MCQ	2	**A**
Q.43	MCQ	2	**A**
Q.44	MCQ	2	**A**
Q.45	MCQ	2	**C**
Q.46	MCQ	2	**C**
Q.47	MCQ	2	**C**
Q.48	MCQ	2	**D**
Q.49	MCQ	2	**B**
Q.50	MCQ	2	**C**
Q.51	MCQ	2	**A**
Q.52	MCQ	2	**A**
Q.53	MSQ	2	**A, D**
Q.54	MSQ	2	**B**
Q.55	MSQ	2	**Marks to all**
Q.56	MSQ	2	**B, C**
Q.57	NAT	2	**2.4 to 2.6**
Q.58	NAT	2	**2490 to 2510**
Q.59	NAT	2	**0.49 to 0.51**
Q.60	NAT	2	**0.39 to 0.41**
Q.61	NAT	2	**512**
Q.62	NAT	2	**1**
Q.63	NAT	2	**0.25 to 0.27**
Q.64	NAT	2	**537.00 to 539.00**
Q.65	NAT	2	**128**

General Aptitude Q.1 to Q.10

Q.1 MCQ · 1 MARK

General Aptitude › Grammar & vocabulary

Suresh said, “I did it yesterday.”

Which one of the following options is the correct form of this sentence in indirect speech?

(A) Suresh said that I did it yesterday.

(B) Suresh says I did it yesterday.

(C) Suresh says that he did it the day before.

(D) Suresh said that he had done it the day before.

Official answer: **D**

SOLUTION

1. Keep the reporting verb as it is. The direct sentence has "said", so the indirect sentence must also begin "Suresh said". Converting to indirect speech does not change the tense of the reporting verb. That rules out (B) and (C), which change it to "says".
2. Change the pronoun to match the speaker. Suresh is talking about himself, so the first-person "I" inside the quote becomes the third-person "he" in reported speech. (A) keeps "I", which now reads as if the narrator did it, so (A) is out.
3. Backshift the tense. When the reporting verb is in the past ("said"), a simple past verb inside the quote moves back to the past perfect, so "did" becomes "had done".
4. Shift the time word. Reported later, "yesterday" is no longer measured from today, so it becomes "the day before" (or "the previous day").
5. Put it together: Suresh said that he had done it the day before. This is option (D) word for word. (D) is also the only option that applies all four changes (reporting verb kept, pronoun changed, tense backshifted, time word shifted).

KEY IDEA

To turn a quote into indirect speech with a past reporting verb, make four changes together: keep "said", change the pronoun to fit the speaker (I becomes he), move the tense one step back (simple past becomes past perfect), and shift the time word (yesterday becomes the day before).

WATCH OUT FOR

Making only some of the changes. (A) leaves the pronoun and the tense as they were. (C) shifts the time word to "the day before" but switches the reporting verb to "says" and keeps "did", which mixes present-tense reporting with past-tense shifts. The correct answer has to make every change at once.

Q.2 MCQ · 1 MARK

General Aptitude › Numerical

Q.2	To continue the sequence of tiles shown, the tile indicated by the question mark should be 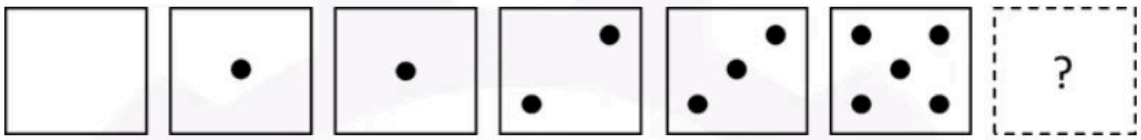
(A)	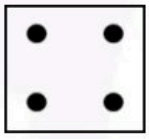
(B)	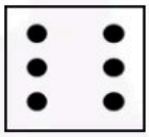
(C)	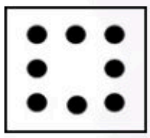
(D)	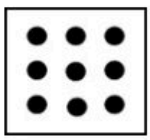

Official answer: **C**

SOLUTION

1. Count the dots on each tile from left to right: $0, 1, 1, 2, 3, 5, \ ?$
2. Check the differences first: $1, 0, 1, 1, 2$. They are not constant, so the sequence is not arithmetic.
3. Test the Fibonacci rule, in which each term is the sum of the two terms before it: $0 + 1 = 1$, $1 + 1 = 2$, $1 + 2 = 3$, $2 + 3 = 5$. All four checks hold, so this rule produces every term shown.
4. So the next tile must have $3 + 5 = 8$ dots.
5. Count the dots on each option: (A) has 4, (B) has 6, (C) has $3 + 1 + 1 + 3 = 8$ and (D) has 9.
6. Only option (C) has 8 dots, so the missing tile is (C).

KEY IDEA

In a tile series, ignore the pictures at first and just count what is on each tile. Here the counts 0, 1, 1, 2, 3, 5 form the Fibonacci sequence, where each term is the sum of the two before it. So the next term is 3 + 5 = 8, and only one option has 8 dots.

WATCH OUT FOR

Tile 6 looks like the five on a die, so it is easy to assume the tiles are die faces counting up and pick (B), the six. That rule breaks at the start: the tiles begin 0, 1, 1, so a count does repeat. The other mistake is picking (D), the full 3 x 3 grid, because it looks like the natural way to finish the pattern. It has 9 dots, not 8.

Q.3 MCQ · 1 MARK

General Aptitude › Reasoning

Q.3	Consider an art gallery whose walkways are shown as lines in the diagram. A black dot represents a junction of two walkways. A guard may be placed at a junction to watch over the walkways that join at that junction. The minimum number of guards needed to watch all the walkways is _____. 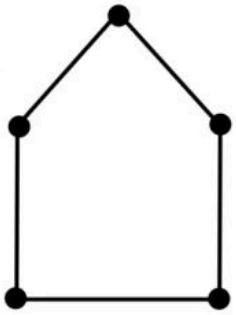
(A)	2
(B)	3
(C)	4
(D)	5

Official answer: **B**

SOLUTION

1. Model the gallery as a graph. The junctions are vertices and the walkways are edges. The figure is a closed house-shaped pentagon, so it is a 5-cycle with 5 vertices and 5 edges, and every vertex has degree 2.
2. A guard at a junction watches exactly the walkways that meet there, so each guard watches exactly 2 walkways. We need the smallest set of junctions that touches every walkway. In graph terms this is a minimum vertex cover.

3. Lower bound: 2 guards watch at most $2 \times 2 = 4$ walkways, but there are 5. So at least $\left\lceil \frac{5}{2} \right\rceil = 3$ guards are needed.
4. Now show that 3 guards are enough. Label the junctions T (apex), L and R (upper left and upper right), and BL and BR (bottom left and bottom right). Place guards at T, BL and BR.
5. Check the cover. T watches T–L and T–R. BL watches L–BL and BL–BR. BR watches R–BR (and BL–BR again). All 5 walkways are watched.
6. The minimum number of guards is 3, which is option (B).

KEY IDEA

Treat the walkways as the edges of a 5-cycle and the junctions as its vertices. Each guard covers only the 2 edges at his junction, so covering 5 edges needs at least $\left\lceil \frac{5}{2} \right\rceil = 3$ guards, and 3 well-placed guards (apex plus both bottom corners) do the job.

WATCH OUT FOR

Answering 2 by putting guards at two opposite-looking corners, such as the two upper side junctions, and forgetting that the bottom walkway is then unwatched. Two guards can cover at most 4 walkways, and there are 5. The other trap is thinking a guard is needed at every junction (5), when a guard at one junction also covers both walkways ending there.

Q.4 MCQ · 1 MARK

General Aptitude › Numerical

The 2nd of June is a Thursday in a certain year. Which day of the week is the 3rd of July in that year?

(A) Thursday

(B) Friday

(C) Saturday

(D) Sunday

Official answer: **D**

SOLUTION

1. Only the days of June and the first days of July lie between the two dates. June always has 30 days, and February (the only month a leap year changes) comes before 2 June, so it does not matter whether the year is a leap year.
2. Count the days from 2 June to 3 July: from 2 June to 30 June is $30 - 2 = 28$ days, and from 30 June to 3 July is 3 more days, so the gap is $28 + 3 = 31$ days.
3. The day of the week repeats every 7 days, so only the remainder matters: $31 = 4 \times 7 + 3$, which leaves 3 extra days.
4. Move 3 days forward from Thursday: Thursday $\rightarrow$ Friday $\rightarrow$ Saturday $\rightarrow$ Sunday.
5. Check: 30 June is $28 = 4 \times 7$ days after 2 June, so it is also a Thursday. Then 1 July is a Friday, 2 July a Saturday and 3 July a Sunday. The answer is (D) Sunday.

KEY IDEA

Count the days between the two dates and divide by 7. Only the remainder shifts the weekday: here 31 days is 4 full weeks plus 3 days, so Thursday moves forward 3 days to Sunday.

WATCH OUT FOR

Off-by-one counting. Some students count 2 June as day 1 and get 32 days (remainder 4, Monday, which is not even an option). Others take June as 31 days and get 32 days again. The gap is 3 July minus 2 June: 28 days to the end of June plus 3 days of July, which is 31.

Q.5 MCQ · 1 MARK

General Aptitude › Reasoning

Q.5	A coin with heads facing up is shown as (H) and a coin with tails facing up is shown as (T) . Six coins are placed in the Starting Arrangement, as shown in the figure below. A "step" is defined as interchanging a pair of adjacent coins without flipping them. The minimum number of steps needed to go from the Starting Arrangement to the Final Arrangement, as shown in the figure, is _____. Starting Arrangement: (H)(H)(H)(T)(T)(T) Final Arrangement: (T)(T)(T)(H)(H)(H)
(A)	3
(B)	6
(C)	9
(D)	12

Official answer: **C**

SOLUTION

1. We need to turn $HHHTTT$ into $TTTHHH$. A step swaps two neighbouring coins without flipping them. Swapping two coins that show the same face leaves the arrangement unchanged, so every useful step swaps an H with a T next to it.
2. Count out-of-order pairs. Call a pair made of one H and one T out of order when the H is to the left of the T. In the final arrangement every T is to the left of every H, so the final arrangement has 0 out-of-order pairs.
3. In the starting arrangement every H is to the left of every T, so all $3 \times 3 = 9$ possible H–T pairs are out of order.
4. Swapping a neighbouring H and T reverses the order of that one pair only. Every other pair keeps its relative order, because no other coin passes over another. So each step lowers the count by at most 1, and going from 9 to 0 needs at least 9 steps.

5. 9 steps are also enough. Move the rightmost H three places to the right (3 steps), then the middle H (3 steps), then the leftmost H (3 steps):
$$HHHTTT \to HHTTTH \to HTTTHH \to TTTHHH$$
6. Minimum number of steps $= 3 + 3 + 3 = 9$, which is option (C).

KEY IDEA
Count inversions. An adjacent swap reverses the order of exactly one H–T pair, so the minimum number of adjacent swaps equals the number of pairs that must change order: 3 heads × 3 tails = 9.

WATCH OUT FOR
Answering 3 by thinking of each H trading places with a T in one move. A step only swaps neighbours, so every H must pass each of the 3 T's one step at a time, which gives 3 × 3 = 9. Answering 6 is another common slip, from counting only how far the blocks shift and not the number of crossings.

Q.6 MCQ · 2 MARKS

General Aptitude › Reasoning

Exacerbate : Mitigate :: _____

Choose the option with the correct pair of words to fill the blank.

(A) Aggravate : Alleviate
(B) Alleviate : Precipitate
(C) Aggravate : Precipitate
(D) Emancipate : Exonerate

Official answer: **A**

SOLUTION

1. Work out how the given pair is related. *Exacerbate* means to make a problem or situation worse. *Mitigate* means to make it less severe. So the two words are **antonyms**, and they come in the order *worsen : lessen*.
2. The answer pair must have the same relation in the same order: the first word means make worse, and the second means make less severe.
3. (A) *Aggravate* means to make worse, so it is a synonym of exacerbate. *Alleviate* means to lessen or relieve, so it is a synonym of mitigate. The pair reads *worsen : lessen*, an antonym pair in the same order. It matches.
4. (B) *Alleviate* (lessen) : *Precipitate* (to bring something on suddenly, or hasten it). The first word already fails, because a pair that starts with 'lessen' runs the wrong way. Also, *precipitate* means to set off or speed up an event, not to make an existing condition worse. It does not match.
5. (C) *Aggravate* : *Precipitate*. Both words are about bringing on or intensifying something bad, so they are close in meaning, not opposites. It does not match.
6. (D) *Emancipate* (set free) : *Exonerate* (free from blame). Both words are about freeing, so the pair is synonymous, not antonymous. It does not match.
7. Only (A) keeps both the antonym relation and the order *worsen : lessen*. The answer is (A).

KEY IDEA
In an analogy, first name the relation in the given pair (here antonyms, 'worsen : lessen'). Then check each option for both the relation and the order. A quick test is to swap in synonyms: aggravate is close to exacerbate, and alleviate is close to mitigate.

WATCH OUT FOR
Picking (B) because it pairs a 'lessen' word with a 'bring on' word. That misses the order: the given pair starts with the worsening word, so (B) is reversed even on the loosest reading. Another trap is choosing a pair of words that merely look alike (Emancipate : Exonerate) without checking their relation.

Q.7 MCQ · 2 MARKS

General Aptitude › Spatial

Q.7	A paper shown in Panel I is folded along the dashed lines (- - -) to construct a cube. The shaded regions shown in Panel I appear on the outer surface of the cube. Referring to cubes shown in Panel II, which one of the options is correct? 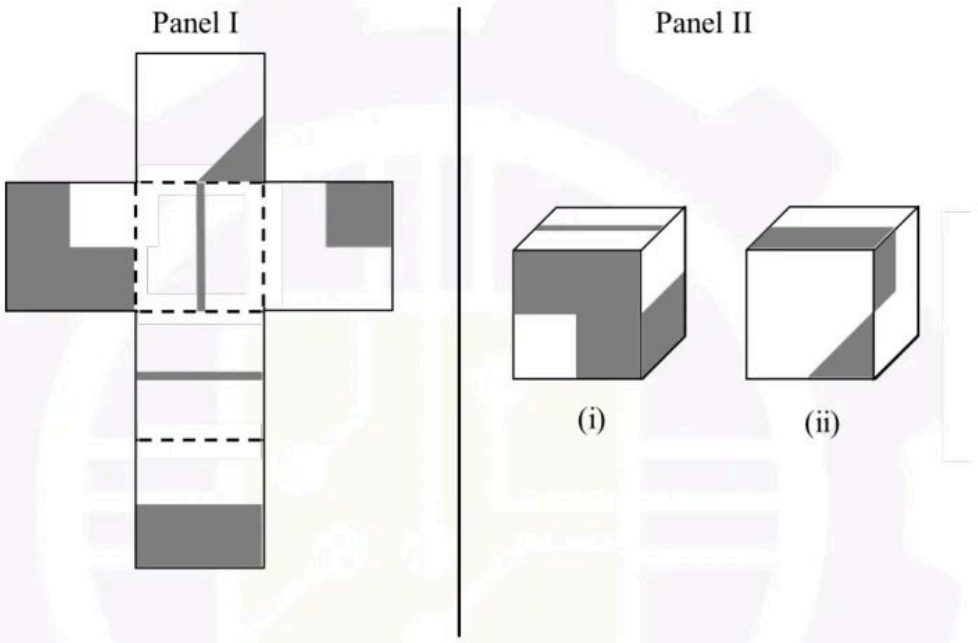
(A)	Only (i) can correspond to the unfolded cube in Panel I.
(B)	Only (ii) can correspond to the unfolded cube in Panel I.
(C)	Both (i) and (ii) can correspond to the unfolded cube in Panel I.
(D)	Neither (i) nor (ii) can correspond to the unfolded cube in Panel I.

Official answer: **B**

SOLUTION

1. **Name the faces.** T = top square (triangle), L = left square ($\frac{3}{4}$ grey), C = centre square (vertical stripe), R = right square (grey quarter), S = square below C (horizontal stripe), H = bottom square (half grey).
2. **Opposite faces in a cross net:** two squares that are one square apart in a straight row are opposite. So T–S, C–H and L–R are the opposite pairs. Any two faces that are not in the same pair share an edge.

3. **Fold with C facing you.** T becomes the top, L the left, R the right, S the bottom and H the back. H is hinged to S, so H's grey lower half becomes the upper half of the back face, which is the half along its edge with T.
4. **Where each marking ends up:** the triangle on T sits at the corner where T meets C and R, with its legs along the T–C and T–R edges. L is white only in the quarter at the corner where it meets T and C. R's grey quarter is at the corner where R, T and H meet. The stripe on S runs parallel to the S–H edge and at right angles to the S–L edge.
5. **Cube (i):** the front must be L, because it is the only $\frac{3}{4}$-grey face. The right face must be H, because it is the only half-grey face. The top face carries a thin stripe, so it is C or S. C is opposite H and cannot touch the right face, so the top face is S.
6. In (i), L's white quarter is diagonally opposite the corner it shares with H and S (the top-right corner of the front face), which is correct. H's grey half is the half away from S (the lower half of the right face), which is also correct. But the stripe on S must meet the S–L edge (the top face's front edge) at a right angle and run from front to back. The drawing shows it parallel to the front edge, so (i) is impossible.
7. **Cube (ii):** the front is T (the only face with a triangle), the top is H (half grey) and the right face is R (grey quarter). No two of these are an opposite pair, so all three can meet at one corner, the corner shared by T, R and H.
8. Check (ii) against the fold. The triangle on T lies on the R edge, at the end away from H, so it should be at the bottom-right of the front face ✓. H's grey half lies along its edge with T, so the front half of the top face should be grey ✓. R's grey quarter touches the corner shared with T and H, so it should be at the top-front of the right face ✓. On the folded cube the three faces also go round that corner in the same order as in the drawing (top, then right, then front, clockwise), so (ii) is not a mirror image.
9. Only (ii) can come from the net, so the answer is **(B)**.

KEY IDEA

In a cross-shaped net, squares one apart in a straight line become opposite faces, and every other pair shares an edge. Fix one face as the front, fold the net, and note which edge or corner each marking touches. A drawn cube is possible only if all three visible faces can meet at one corner, each marking touches the right edge or corner, and the faces go round the corner in the right order (no mirror image).

WATCH OUT FOR

Accepting (i) because its three faces (L, S, H) can meet at a corner and the two big markings, L's white quarter and H's grey half, are in the right places, without checking which way the thin stripe on S runs. That stripe has to cross the S–L edge at a right angle, so it cannot be parallel to the front edge. A second common slip is forgetting that H turns over when it folds onto S: its lower half in the net becomes the half of the back face next to T.

Q.8 MCQ · 2 MARKS

General Aptitude › Reasoning

In a population, patients who have high cholesterol also have high blood-pressure (BP). Some patients with high BP also have diabetes. There are no patients who have both high cholesterol and diabetes. Furthermore,

1. the total number of patients with at least one of these conditions is 75,
2. the number of patients with high cholesterol is 10,
3. the number of patients with high BP is 45, and
4. the number of patients with only high BP and no other conditions is 20.

Then the number of patients who have both diabetes and high BP is _____

(A) 0

(B) 15

(C) 20

(D) 10

Official answer: **B**

SOLUTION

1. Write the statements as set relations. Let C, B and D be the sets of patients with high cholesterol, high BP and diabetes. Everyone with high cholesterol also has high BP, so $C \subseteq B$. No one has both high cholesterol and diabetes, so $C \cap D = \varnothing$. The data give $|C \cup B \cup D| = 75$, $|C| = 10$, $|B| = 45$, and only high BP $= 20$.
2. Split the high-BP group into parts that do not overlap. Because $C \subseteq B$ and $C \cap D = \varnothing$, no patient has all three conditions, so the high-BP group has exactly three parts: (i) high BP with high cholesterol and no diabetes $= |C| = 10$; (ii) only high BP $= 20$; (iii) high BP with diabetes and no high cholesterol $= x$.
3. The three parts make up the whole high-BP group:
$$10 + 20 + x = |B| = 45 \;\Rightarrow\; x = 15$$
4. Check against the total. Since $C \subseteq B$, the union is $C \cup B \cup D = B \cup D$, so the number with only diabetes is $75 - 45 = 30$. That is a valid non-negative count, and $x = 15 > 0$ agrees with "Some patients with high BP also have diabetes". The data are consistent.
5. Because $C \cap D = \varnothing$, every patient with both diabetes and high BP is in part (iii). So $|B \cap D| = 15$, which is option (B).

KEY IDEA

Write "all X are Y" as $C \subseteq B$ and "no one is both" as $C \cap D = \varnothing$. Then no one has all three conditions, and the high-BP circle splits into three separate parts: cholesterol + BP, only BP, and BP + diabetes. Subtract the two known parts from $|B|$ to get the third. The total of 75 is only needed to check that the numbers fit.

WATCH OUT FOR

Using the total of 75 to find the overlap. For example, $75 - 45 - 10 = 20$ gives option (C), but that counts the cholesterol group twice: it lies inside the BP group and is already part of the 45. Another error is to subtract only the 20 "only high BP" patients from 45 and answer 25, which forgets that the 10 cholesterol patients are also in the high-BP group.

Q.9 MCQ · 2 MARKS

General Aptitude › Reasoning

Four people P, Q, R, and S, of different ages, make the following observations.

P – I am younger than S.

Q – I am neither the youngest nor the oldest.

R – P is older than me.

Based on these observations, the youngest person is _____.

(A) P

(B) Q

(C) R

(D) S

Official answer: **C**

SOLUTION

1. Write each statement as an inequality of ages. From P: $P < S$. From R: $P > R$, that is, $R < P$.
2. Chain the two inequalities (the order is transitive): $R < P < S$.
3. From Q: Q is neither the youngest nor the oldest, so Q holds position 2 or 3 in the order from youngest to oldest.
4. The only orders that satisfy all three statements are $R < Q < P < S$ and $R < P < Q < S$.

5. R comes first in both, so R is the youngest whichever middle position Q takes (S is the oldest in both).
6. Check the options: P is older than R, S is older than P, and Q cannot be the youngest by its own statement, which leaves only R.

KEY IDEA

Turn each statement into an age inequality and chain them. $P < S$ and $R < P$ give $R < P < S$, so neither P nor S can be the youngest. Q rules itself out, which leaves R. You do not need the full order to answer.

WATCH OUT FOR

Misreading R's statement "P is older than me" as $R > P$. It means $P > R$, so R is younger than P. Some candidates also think Q's statement makes the order ambiguous. Q can sit second or third, but R is youngest either way, so the question still has one answer.

Q.10 MCQ · 2 MARKS

General Aptitude › Geometry

Q.10	Circles C_1, C_2, and C_3, with centers O_1, O_2, and O_3 , and radii r_1 , r_2, and r_3, respectively, touch each other as shown in the following figure. Given $r_1 = 2$ cm, $r_2 = 1$ cm and the angle $\angle O_1O_3O_2$ is 90°, r_3 = _____ cm. 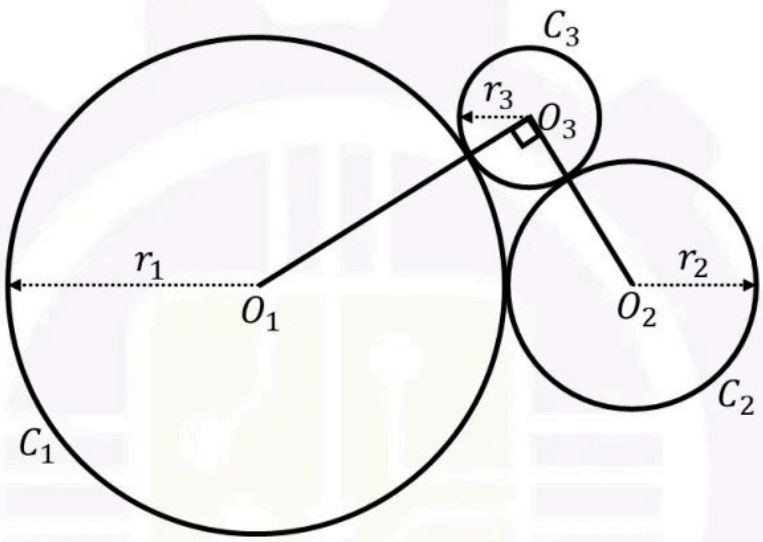
(A)	$\frac{1}{2}(-3+\sqrt{17})$
(B)	$\frac{1}{2}(3+\sqrt{17})$
(C)	$\frac{1}{2}(-2+\sqrt{17})$
(D)	$\frac{1}{2}(-3+2\sqrt{17})$

Official answer: **A**

SOLUTION

1. When two circles touch externally, the distance between their centres equals the sum of their radii. Let $r_3 = r$.
2. Apply this to each pair. $O_1O_3 = r_1 + r = 2 + r$ and $O_2O_3 = r_2 + r = 1 + r$. The circles "touch each other", and the figure shows C_1 and C_2 touching too, so $O_1O_2 = r_1 + r_2 = 2 + 1 = 3$ cm.

3. Triangle $O_1O_3O_2$ has its right angle at O_3, so the side opposite it, O_1O_2, is the hypotenuse. By Pythagoras:
$$(2+r)^2+(1+r)^2=3^2$$
4. Expand:
$$4+4r+r^2+1+2r+r^2=9 \;\Rightarrow\; 2r^2+6r-4=0 \;\Rightarrow\; r^2+3r-2=0$$
5. By the quadratic formula:
$$r=\frac{-3\pm\sqrt{3^2+4\cdot 2}}{2}=\frac{-3\pm\sqrt{17}}{2}$$
6. A radius must be positive. $\frac{-3-\sqrt{17}}{2}$ is negative, so take the + sign: $r_3=\frac{1}{2}\left(-3+\sqrt{17}\right)\approx 0.56\ \text{cm}$. This is option (A).
7. Check: with $r\approx 0.5616$, $(2.5616)^2+(1.5616)^2\approx 6.5616+2.4384=9=3^2$, so the angle at O_3 is a right angle. Also $r_3\approx 0.56\ \text{cm}$ is smaller than both r_1 and r_2, as drawn.

KEY IDEA

When circles touch externally, the distance between two centres is the sum of their radii. That gives all three sides of triangle $O_1O_3O_2$ in terms of r_3: $2+r_3$, $1+r_3$ and 3. The right angle at O_3 makes $O_1O_2=3$ the hypotenuse, and Pythagoras then gives a quadratic in r_3.

WATCH OUT FOR

The usual slip is to put the hypotenuse in the wrong place. The right angle is at O_3, so the hypotenuse is $O_1O_2=3$, not one of the sides that involve r_3. Other errors are forgetting that C_1 and C_2 also touch (so $O_1O_2=r_1+r_2$), and picking option (B), $\frac{1}{2}(3+\sqrt{17})$, after a sign slip in the quadratic formula. Option (B) is about 3.56 cm, larger than both given radii. That contradicts both the figure and Pythagoras, since the legs $2+r_3$ and $1+r_3$ could not then fit a hypotenuse of 3.

Instrumentation Engineering Q.11 to Q.65

Q.11 MCQ · 1 MARK

Engineering Mathematics › Linear algebra

A matrix $P \in \mathbb{R}^{3\times 3}$ satisfies $P^3 - 4P^2 + 5P - 2I = 0$ where I is a 3×3 identity matrix.

The set of all possible eigenvalues of matrix P is ___.

(A) $\{1, 2, 3\}$

(B) $\{1\}$

(C) $\{1, 2\}$

(D) $\{2\}$

Official answer: **C**

SOLUTION

1. **Eigenvalues satisfy any polynomial that annihilates the matrix.** If $P\mathbf{x} = \lambda\mathbf{x}$ with $\mathbf{x} \neq \mathbf{0}$, then $P^k\mathbf{x} = \lambda^k\mathbf{x}$ for every k. Applying the given identity to $\mathbf{x}$:
$$\left(P^3 - 4P^2 + 5P - 2I\right)\mathbf{x} = \left(\lambda^3 - 4\lambda^2 + 5\lambda - 2\right)\mathbf{x} = \mathbf{0}$$
Since $\mathbf{x} \neq \mathbf{0}$, every eigenvalue must satisfy $\lambda^3 - 4\lambda^2 + 5\lambda - 2 = 0$.
2. **Find a root by inspection.** At $\lambda = 1$: $1 - 4 + 5 - 2 = 0$, so $(\lambda - 1)$ is a factor.
3. **Factorise.**
$$\lambda^3 - 4\lambda^2 + 5\lambda - 2 = (\lambda - 1)(\lambda^2 - 3\lambda + 2) = (\lambda - 1)^2(\lambda - 2)$$
4. **Read off the candidates.** The only roots are 1 and 2 (both real), so every eigenvalue of P, real or complex, must be 1 or 2. The value 3 can never occur, which rules out option (A).
5. **Both values actually occur.** Take $P = \begin{bmatrix} 1 & 0 & 0 \\ 0 & 1 & 0 \\ 0 & 0 & 2 \end{bmatrix}$. Then $P - I = \begin{bmatrix} 0 & 0 & 0 \\ 0 & 0 & 0 \\ 0 & 0 & 1 \end{bmatrix}$ and $P - 2I = \begin{bmatrix} -1 & 0 & 0 \\ 0 & -1 & 0 \\ 0 & 0 & 0 \end{bmatrix}$, so $(P - I)^2(P - 2I) = 0$, which is the given identity. This P has both eigenvalues 1 and 2, so neither $\{1\}$ nor $\{2\}$ alone is the full set. The set of all possible eigenvalues is $\{1, 2\}$, option (C).

KEY IDEA

If a polynomial p satisfies $p(P) = 0$, then every eigenvalue λ of P satisfies $p(\lambda) = 0$, because $p(P)\mathbf{x} = p(\lambda)\mathbf{x}$ for an eigenvector $\mathbf{x}$. So the eigenvalues can only be roots of p. The given polynomial need not be the characteristic polynomial: $P = I$ and $P = 2I$ also satisfy it.

WATCH OUT FOR

Choosing (A) on the assumption that a 3×3 matrix needs three different eigenvalues, when the cubic has a repeated root and 3 is not a root at all. A second error is to treat the given cubic as the characteristic polynomial. Here that happens to give the same set, but the reasoning is wrong, since $P = I$ also satisfies the identity and has only the eigenvalue 1.

Q.12 MCQ · 1 MARK

Engineering Mathematics › Calculus

Which one among the following statements is true for the function $f(x) = x|x|$?

(A) $f(x)$ is discontinuous but not differentiable at $x = 0$.

(B) $f(x)$ is discontinuous and differentiable at $x = 0$.

(C) $f(x)$ is continuous but not differentiable at $x = 0$.

(D) $f(x)$ is continuous and differentiable at $x = 0$.

Official answer: **D**

SOLUTION

1. Write the function piecewise:
$$f(x) = x|x| = \begin{cases} x^2, & x \geq 0 \\ -x^2, & x < 0 \end{cases}$$
2. Continuity at $x = 0$: $\lim_{x \to 0^+} x^2 = 0$, $\lim_{x \to 0^-} (-x^2) = 0$ and $f(0) = 0$. The left limit, the right limit and the value agree, so f is continuous at $x = 0$.
3. Differentiability, from the definition of the derivative. For $h \neq 0$, $\frac{h|h|}{h} = |h|$, so
$$f'(0) = \lim_{h \to 0} \frac{f(h) - f(0)}{h} = \lim_{h \to 0} \frac{h|h|}{h} = \lim_{h \to 0} |h| = 0$$
4. The one-sided derivatives agree: the right-hand derivative is $\lim_{h \to 0^+} h = 0$ and the left-hand derivative is $\lim_{h \to 0^-} (-h) = 0$. So $f'(0)$ exists and equals 0.
5. Cross-check: $f'(x) = 2x$ for $x > 0$, $f'(x) = -2x$ for $x < 0$ and $f'(0) = 0$, which is $f'(x) = 2|x|$ for every x. This derivative is continuous but has a corner at 0, so f is differentiable once at 0 but not twice.
6. Eliminate the options. A and B both claim f is discontinuous at 0, which step 2 disproves (B is impossible anyway, since a function differentiable at a point is continuous there). C claims f is not differentiable at 0, which steps 3 and 4 disprove. Option D is correct.

KEY IDEA

Split $|x|$ by sign to get $f(x) = x^2$ for $x \geq 0$ and $-x^2$ for $x < 0$. At 0, both the one-sided limits and the one-sided difference quotients $\frac{h|h|}{h} = |h|$ go to 0, so f is continuous and differentiable there, with $f'(0) = 0$. Multiplying $|x|$ by x smooths out the corner of $|x|$ once: $f'(x) = 2|x|$ still has a corner, so $f''(0)$ does not exist.

WATCH OUT FOR

Seeing $|x|$ and picking C by reflex, because $|x|$ itself is not differentiable at 0. The extra factor x makes the difference quotient $|h|$, which tends to 0 from both sides. A second slip is to confuse "differentiable once" with "differentiable twice": $f''(0)$ does not exist, but the question asks only about the first derivative.

Q.13 MCQ · 1 MARK

Engineering Mathematics › Complex analysis

Consider a function $f(z) = z^2 + z + 1$ where $z \in \mathbb{C}$ is a complex variable. A simple closed contour γ in z-plane encloses the point $z = 1 + 0j$.

The value of integral $\oint_\gamma \frac{f(z)}{z - 1}\, dz =$ _____.

(A) $6\pi j$

(B) $3\pi j$

(C) $12\pi j$

(D) πj

Official answer: **A**

SOLUTION

1. $f(z) = z^2 + z + 1$ is a polynomial, so it is analytic everywhere (entire), including on and inside γ.
2. The integrand $\frac{f(z)}{z - 1}$ is analytic everywhere except at $z = 1$. Since $f(1) = 3 \neq 0$, that point is a simple pole, and γ encloses it. It is the only singularity inside γ.
3. Apply the Cauchy integral formula, taking γ in the usual positive (anticlockwise) sense:

$$\oint_\gamma \frac{f(z)}{z - z_0}\,dz = 2\pi j\, f(z_0), \quad z_0 = 1$$

4. Evaluate f at the pole: $f(1) = 1^2 + 1 + 1 = 3$.
5. Hence
$$\oint_\gamma \frac{f(z)}{z - 1}\,dz = 2\pi j \times 3 = 6\pi j$$
6. Check with the residue theorem: the residue at the simple pole $z = 1$ is $\lim_{z\to 1}(z-1)\dfrac{f(z)}{z-1} = f(1) = 3$, so the integral is $2\pi j \times 3 = 6\pi j$. The answer is option (A).

KEY IDEA

Cauchy integral formula: if f is analytic on and inside a simple closed contour γ traversed anticlockwise, and z_0 lies inside γ, then $\oint_\gamma \frac{f(z)}{z - z_0}\,dz = 2\pi j\, f(z_0)$. Here f is a polynomial, so the integral is simply $2\pi j$ times $f(1)$, whatever shape γ has.

WATCH OUT FOR

Leaving out the factor 2π. Writing $\pi j\, f(1) = 3\pi j$ gives option (B), and dropping the factor 3 gives πj, option (D). Another slip is evaluating f at $z = 0$ or at the wrong point, or squaring twice, which can lead to $12\pi j$ (C). The integral is $2\pi j$ times f evaluated at the enclosed pole, $z_0 = 1$.

Q.14 MCQ · 1 MARK

Engineering Mathematics › Linear algebra

Consider a matrix

$$A = \begin{bmatrix} 1 & 0 & 2 \\ -1 & 1 & 0 \\ 0 & 1 & 2 \end{bmatrix}$$

Let $b = \begin{bmatrix} 1 \\ 3 \\ 0 \end{bmatrix}$ and $x = \begin{bmatrix} x_1 \\ x_2 \\ x_3 \end{bmatrix}$

The number of solutions to the linear system of equations $Ax = b$ is _____.

(A) 0

(B) 1

(C) 6

(D) infinitely many

Official answer: **A**

SOLUTION

1. Check whether A is singular by expanding $\det A$ along the first row:
$$\det A = 1\,(1 \cdot 2 - 0 \cdot 1) - 0 + 2\,((-1) \cdot 1 - 1 \cdot 0) = 2 - 2 = 0$$
So A is singular and a unique solution is ruled out. The system has either no solution or infinitely many, and the rank test decides which.
2. Find the dependence among the rows: $R_1 + R_2 = [1,\ 0,\ 2] + [-1,\ 1,\ 0] = [0,\ 1,\ 2] = R_3$. Rows 1 and 2 are not multiples of each other, so $\rho(A) = 2$.
3. Form the augmented matrix and apply the same row operation, $R_3 \to R_3 - R_1 - R_2$:
$$[A\,|\,b] = \begin{bmatrix} 1 & 0 & 2 & 1 \\ -1 & 1 & 0 & 3 \\ 0 & 1 & 2 & 0 \end{bmatrix} \to \begin{bmatrix} 1 & 0 & 2 & 1 \\ -1 & 1 & 0 & 3 \\ 0 & 0 & 0 & -4 \end{bmatrix}$$
4. The last row reads $0 = -4$, which is impossible. Put another way, the system is consistent only if b obeys the same dependence as the rows, $b_3 = b_1 + b_2 = 1 + 3 = 4$, but here $b_3 = 0$. The three rows of the reduced augmented matrix are independent, so $\rho([A\,|\,b]) = 3$. (Direct check: the first equation

gives $x_1 = 1 - 2x_3$, and the second then gives $x_2 = 3 + x_1 = 4 - 2x_3$. So $x_2 + 2x_3 = 4$ for every candidate, while the third equation demands $x_2 + 2x_3 = 0$.)

5. Rank (Rouché–Capelli) test: $\rho(A) = 2 \neq \rho([A \,|\, b]) = 3$, so the system is inconsistent. The number of solutions is 0, which is option (A).

KEY IDEA

When a square A is singular ($\det A = 0$), $Ax = b$ has either no solution or infinitely many. It has infinitely many exactly when b satisfies the same linear dependence as the rows of A, i.e. when $\rho(A) = \rho([A \,|\, b])$. Here $R_3 = R_1 + R_2$ but $b_3 \neq b_1 + b_2$, so there are no solutions.

WATCH OUT FOR

Seeing $\det A = 0$ and choosing "infinitely many" (D) straight away. A zero determinant only rules out a unique solution. You still have to check b against the row dependence, and here $b_3 = 0 \neq b_1 + b_2 = 4$. A sign slip in the cofactor $(-1 \cdot 1 - 1 \cdot 0) = -1$ can also make $\det A$ look nonzero, which leads to the wrong answer (B).

Q.15 MCQ · 1 MARK

Electromagnetics › Electrostatics

An electric field has a potential of $V(x, y, z) = \sqrt{x^2 + y^2 + z^2}$ V.

A charge of 1 coulomb placed at $(\hat{i} + \hat{j} + \hat{k})$ experiences a force of

$$\mathbf{F} = (a\hat{i} + b\hat{j} + c\hat{k}) \text{ N}$$

The values of (a, b, c) are _____.

(A) $a = \dfrac{1}{\sqrt{3}},\ b = \dfrac{1}{\sqrt{3}},\ c = \dfrac{1}{\sqrt{3}}$

(B) $a = \dfrac{1}{3},\ b = \dfrac{1}{3},\ c = \dfrac{1}{3}$

(C) $a = 0,\ b = 1,\ c = \dfrac{1}{\sqrt{3}}$

(D) $a = 0,\ b = 1,\ c = \dfrac{1}{3}$

Official answer: **Marks to all**

SOLUTION

1. **Field from potential.** The field is $\mathbf{E} = -\nabla V$. Write $r = \sqrt{x^2 + y^2 + z^2}$, so $V = r$.
2. **Gradient of r.** $\dfrac{\partial r}{\partial x} = \dfrac{x}{r}$, and likewise for y and z. So
$$\nabla V = \frac{x\hat{i} + y\hat{j} + z\hat{k}}{r} = \hat{a}_r,$$
which is the unit vector pointing radially outward. This holds everywhere except the origin.
3. **Field at the point.** The position $\hat{i} + \hat{j} + \hat{k}$ is the point $(1, 1, 1)$, where $r = \sqrt{3}$. So
$$\mathbf{E} = -\frac{\hat{i} + \hat{j} + \hat{k}}{\sqrt{3}} \text{ V/m}.$$
Its magnitude is $|\mathbf{E}| = 1 \text{ V/m}$.
4. **Force on the charge.** $\mathbf{F} = q\mathbf{E}$ with $q = 1$ C:
$$\mathbf{F} = -\frac{1}{\sqrt{3}}\hat{i} - \frac{1}{\sqrt{3}}\hat{j} - \frac{1}{\sqrt{3}}\hat{k} \text{ N},$$
so strictly $a = b = c = -\dfrac{1}{\sqrt{3}}$. Check: the force points toward the origin, where V is lowest. That is right, because a positive charge is pushed toward lower potential.
5. **Matching the options.** As printed, no option is exactly correct, because every option gives positive components. Option (A) is the only one with the correct size, $\dfrac{1}{\sqrt{3}}$, equal on all three axes. It is exactly

what you get if the minus sign in $\mathbf{E} = -\nabla V$ is dropped. Option (B) gives $\frac{x}{r^2} = \frac{1}{3}$, dividing by r^2 instead of by r. Options (C) and (D) give unequal components, which is impossible because both V and the point $(1, 1, 1)$ are symmetric in x, y and z. The organising institute awarded marks to all candidates for this question. The best match is **(A)**, in magnitude only.

KEY IDEA

$\mathbf{E} = -\nabla V$. For $V = r = \sqrt{x^2 + y^2 + z^2}$, $\nabla r = \hat{a}_r$, so the field has magnitude 1 V/m everywhere and points toward the origin. The force on the charge is $\mathbf{F} = q\mathbf{E}$, and at $(1, 1, 1)$ each component is $-\frac{1}{\sqrt{3}}$.

WATCH OUT FOR

There are two. The first is dropping the minus sign in $\mathbf{E} = -\nabla V$, which gives option (A) exactly but puts the force on a positive charge pointing toward higher potential. The second is carrying over the inverse-square habit from a point charge and dividing by r^2, which gives (B). Here the potential grows linearly with r, so the field has the same magnitude everywhere; it does not fall off as $1/r^2$.

Q.16 MCQ · 1 MARK

Networks (Electric Circuits) › AC, power & resonance

Q.16	The RLC filter shown below acts as a _____. 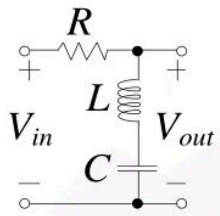
(A)	low pass filter
(B)	high pass filter
(C)	band pass filter
(D)	band stop filter

Official answer: **D**

SOLUTION

1. Reading the circuit: R is the series arm. V_{out} is taken, with no load, across the shunt branch, which is L in series with C. The circuit is therefore a voltage divider with $Z_{sh} = j\omega L + \dfrac{1}{j\omega C}$.
2. Voltage divider. Multiplying the numerator and the denominator by $j\omega C$:

$$H(j\omega) = \frac{V_{out}}{V_{in}} = \frac{j\omega L + \frac{1}{j\omega C}}{R + j\omega L + \frac{1}{j\omega C}} = \frac{1 - \omega^2 LC}{1 - \omega^2 LC + j\omega RC}$$

so

$$|H(j\omega)| = \frac{\left|1-\omega^2 LC\right|}{\sqrt{\left(1-\omega^2 LC\right)^2 + (\omega RC)^2}}$$

3. Low-frequency limit, $\omega \to 0$: C behaves as an open circuit, so the shunt branch carries no current. No current flows through R, it drops no voltage, and $V_{out} = V_{in}$. The formula gives the same result: $|H| \to \frac{1}{1} = 1$.
4. High-frequency limit, $\omega \to \infty$: L behaves as an open circuit, so again no current flows through R and $V_{out} = V_{in}$. From the formula, the $\omega^2 LC$ terms dominate the numerator and the denominator, so $|H| \to 1$.
5. At series resonance, $\omega_0 = \frac{1}{\sqrt{LC}}$: $j\omega_0 L + \frac{1}{j\omega_0 C} = 0$, so the L-C branch is a short circuit across the output and $|H(j\omega_0)| = 0$.
6. The gain is 1 at both ends of the frequency range and falls to 0 in a band around ω_0, which is a notch. The circuit is therefore a band stop filter, option (D).

KEY IDEA

To classify a filter, see what each element becomes at the frequency extremes and at resonance. At DC a capacitor is an open circuit, and at very high frequency an inductor is an open circuit. A series L-C branch has zero impedance at $\omega_0 = 1/\sqrt{LC}$. When that branch is the shunt element and the output is taken across it, the input passes unchanged at both ends of the frequency range and is shorted out at ω_0. That is a band stop (notch) response.

WATCH OUT FOR

Answering band pass. That answer is right for two other circuits, not this one: the same circuit with the output taken across R, or a circuit whose shunt element is a parallel L-C tank, which is an open circuit at resonance. A series L-C branch is the opposite of a tank: it is a short circuit at resonance, so across the output it removes the band around ω_0 instead of passing it. A second slip is to check only one end of the range. Seeing that C blocks DC and stopping there can lead to high pass or low pass, when the gain is actually 1 at both ends.

Q.17 MCQ · 1 MARK

Electrical Machines › Transformers

A single phase step-down transformer has a high voltage primary winding and a low voltage secondary winding. The secondary winding is connected to a load impedance Z_2. The impedance Z_2 when referred to the primary winding is denoted by Z_2'. Which of the following conditions is true?

(A) $Z_2' = Z_2$

(B) $0.5Z_2 < Z_2' < Z_2$

(C) $Z_2' > Z_2$

(D) $Z_2' \leq 0.5Z_2$

Official answer: **C**

SOLUTION

1. Let the turns ratio be $a = \frac{N_1}{N_2}$ (primary turns to secondary turns).
2. In a step-down transformer, the primary is the high-voltage winding and the secondary is the low-voltage winding. Since voltage is proportional to the number of turns, the primary must have more turns than the secondary: $N_1 > N_2$, so $a > 1$.
3. For an ideal transformer, the primary and secondary voltages and currents are related by $V_1 = aV_2$ and $I_1 = \frac{I_2}{a}$.

4. The secondary-side impedance is $Z_2 = \dfrac{V_2}{I_2}$. Referred to the primary side, the impedance is
$$Z_2' = \frac{V_1}{I_1} = \frac{aV_2}{I_2/a} = a^2\frac{V_2}{I_2} = a^2 Z_2$$
5. Since $a > 1$, it follows that $a^2 > 1$, and therefore $Z_2' > Z_2$.
6. This matches option (C).

KEY IDEA

When an impedance is referred from one side of an ideal transformer to the other, it scales by the square of the turns ratio between the side it is being referred TO and the side it originally sits on: $Z_2' = a^2 Z_2$, where $a = N_1/N_2$.

WATCH OUT FOR

Confusing which winding has more turns in a step-down transformer (thinking the primary of a step-down transformer has fewer turns because "step-down" sounds like a reduction), or forgetting the transformation is by a^2, not a, and concluding $Z_2' = Z_2$ or $Z_2' < Z_2$.

Q.18 MCQ · 1 MARK

Signals and Systems › Fourier series

A square wave signal of frequency 20 kHz is passed through an ideal low-pass filter with cut-off frequency of 21 kHz. The output signal is a _____.

(A) 20 kHz sine wave

(B) 20 kHz square wave

(C) 20 kHz triangular wave

(D) 20 kHz saw-tooth wave

Official answer: **A**

SOLUTION

1. **Fourier series of a square wave.** A symmetric square wave that swings between $+A$ and $-A$ with fundamental frequency f_0 contains only odd harmonics:
$$x(t) = \frac{4A}{\pi}\left[\sin(\omega_0 t) + \frac{1}{3}\sin(3\omega_0 t) + \frac{1}{5}\sin(5\omega_0 t) + \cdots\right], \quad \omega_0 = 2\pi f_0$$
2. **Frequencies present.** With $f_0 = 20\ \text{kHz}$, the spectral lines sit at $20\ \text{kHz}$, $60\ \text{kHz}$, $100\ \text{kHz}, \ldots$ (plus a DC term only if the wave has an offset, for example one that swings between 0 and A).
3. **What an ideal LPF does.** An ideal low-pass filter with cut-off $f_c = 21\ \text{kHz}$ passes every component with $f < 21\ \text{kHz}$ unchanged, apart from at most a constant delay, and removes everything above the cut-off completely.
4. **What gets through.** Only the fundamental gets through, because $20\ \text{kHz} < 21\ \text{kHz}$. The next harmonic is at $3f_0 = 60\ \text{kHz} > 21\ \text{kHz}$, so the filter removes it and every higher harmonic. The conclusion does not depend on the square wave being symmetric: any periodic signal with fundamental $20\ \text{kHz}$ has its harmonics at $2f_0 = 40\ \text{kHz}$ and above, which are all beyond the cut-off.
5. **Output.**
$$y(t) = \frac{4A}{\pi}\sin\left(2\pi \cdot 20 \times 10^3\, t\right)$$
This is one sinusoid at $20\ \text{kHz}$, raised by the DC level if the square wave has one. The output is therefore a 20 kHz sine wave, which is option (A).

KEY IDEA

A periodic signal is a sum of sinusoids at whole-number multiples of its fundamental. An ideal LPF keeps only the components below its cut-off. If the cut-off lies between f_0 and the next harmonic that is present, only the fundamental sinusoid gets through, whatever the input's wave shape.

WATCH OUT FOR

Choosing (B) because the frequency is unchanged. The fundamental frequency does survive, but a square shape needs its higher harmonics (60 kHz, 100 kHz, ...) and the filter removes all of them. Another mistake is choosing (C), from the fact that integrating a square wave gives a triangular wave. An ideal LPF is not an integrator. It removes harmonics completely instead of weighting them by $1/n$.

Q.19 MCQ · 1 MARK

Signals and Systems › Signals basics

Given $x(t) = 4\sin(15\pi t) + 7\cos(4\pi t)$, where t is in seconds.

The fundamental period of $x(t)$ is _____ seconds.

(A) 15

(B) 60

(C) 30

(D) 2

Official answer: **D**

SOLUTION

1. Find the period of each sinusoid with $T = \dfrac{2\pi}{\omega}$. For $4\sin(15\pi t)$, $\omega_1 = 15\pi$, so $T_1 = \dfrac{2\pi}{15\pi} = \dfrac{2}{15}$ s. For $7\cos(4\pi t)$, $\omega_2 = 4\pi$, so $T_2 = \dfrac{2\pi}{4\pi} = \dfrac{1}{2}$ s.
2. Check that the sum is periodic: $\dfrac{T_1}{T_2} = \dfrac{2/15}{1/2} = \dfrac{4}{15}$. This is rational, so $x(t)$ is periodic.
3. The fundamental period is the smallest T that is a whole-number multiple of both, $T = m\,T_1 = n\,T_2$. This needs $\dfrac{T_1}{T_2} = \dfrac{n}{m} = \dfrac{4}{15}$. The fraction $\dfrac{4}{15}$ is already in lowest terms (4 and 15 share no common factor), so the smallest choice is $m = 15$, $n = 4$.
4. $$T = 15 \times \frac{2}{15} = 4 \times \frac{1}{2} = 2\ \text{s}$$
5. Check using frequencies: $f_1 = 7.5$ Hz and $f_2 = 2$ Hz. Both are whole-number multiples of 0.5 Hz ($7.5 = 15 \times 0.5$, $2 = 4 \times 0.5$), and 15 and 4 share no common factor, so the fundamental frequency is their GCD, $f_0 = 0.5$ Hz. Then $T = 1/f_0 = 2$ s. This is option (D).

KEY IDEA

A sum of sinusoids is periodic only if the ratio of their periods is rational. When it is, the fundamental period is the least common multiple of the individual periods. Equivalently, the fundamental frequency is the GCD of the individual frequencies. The amplitudes (4 and 7), and whether each term is a sine or a cosine, have no effect on the period.

WATCH OUT FOR

Taking the LCM of the coefficients of πt (15 and 4) and getting 60, which is option (B). Another version of the same slip is to multiply by the wrong factor and get 15 or 30. Those numbers are angular-frequency coefficients, not periods. Convert each term to its period first ($2/15$ s and $1/2$ s), then take the LCM of the periods. That gives 2 s.

Q.20 MCQ · 1 MARK

Signals and Systems › LTI & convolution

Among the following, the differential equation(s) not representative of a linear dynamical system is/are ___.

(i) $\dfrac{d^2x}{dt^2} + 2t\dfrac{dx}{dt} + x(t) = u(t)$

(ii) $\left(\frac{dx}{dt}\right)^2 + 2\frac{dx}{dt} + x(t) = u(t)$

(iii) $\frac{d^2x}{dt^2} + 2\frac{dx}{dt} + x(t) = u(t)$

(A) (i) and (ii) only

(B) (i) only

(C) (ii) only

(D) (ii) and (iii) only

Official answer: **C**

SOLUTION

1. **Linearity test for a differential equation:** the system is linear when the output $x(t)$ and each of its derivatives appears only to the first power, with no products of these terms and no nonlinear functions of them. The coefficients may depend on t. That only makes the system time-varying. It does not make it nonlinear.
2. **Equation (i):** $\frac{d^2x}{dt^2} + 2t\frac{dx}{dt} + x = u$. The coefficient $2t$ multiplies $\frac{dx}{dt}$, which appears to the first power. Suppose x_1 solves the equation for input u_1 and x_2 solves it for u_2. Differentiation is linear, so substituting $ax_1 + bx_2$ gives $au_1 + bu_2$ on the left. Superposition holds, so (i) is **linear and time-varying**.
3. **Equation (ii):** the term $\left(\frac{dx}{dt}\right)^2$ squares a derivative. Let x_1 solve the equation for u_1 and x_2 solve it for u_2. Substituting $x_1 + x_2$ gives
$$(\dot{x}_1 + \dot{x}_2)^2 + 2(\dot{x}_1 + \dot{x}_2) + (x_1 + x_2) = u_1 + u_2 + 2\dot{x}_1\dot{x}_2,$$
which is not $u_1 + u_2$ in general. Scaling also fails. Substituting ax_1 gives $a^2\dot{x}_1^2 + 2a\dot{x}_1 + ax_1$, and this is not $au_1 = a\dot{x}_1^2 + 2a\dot{x}_1 + ax_1$ unless $a = 0$, $a = 1$ or $\dot{x}_1 \equiv 0$. So (ii) is **nonlinear**.
4. **Equation (iii):** $\frac{d^2x}{dt^2} + 2\frac{dx}{dt} + x = u$ has constant coefficients and every term is first-degree in x or its derivatives. So (iii) is **linear and time-invariant**.
5. Only (ii) fails the linearity test. The only equation that does not describe a linear dynamical system is **(ii)**, which is option **(C)**.

KEY IDEA

Linearity depends on how the dependent variable $x(t)$ and its derivatives appear. Each must appear only to the first power, with no products or nonlinear functions of them. A coefficient that depends on time, like $2t$, makes the system time-varying but leaves it linear.

WATCH OUT FOR

Marking (i) as nonlinear because of the $2t$ coefficient, which leads to option (A). A time-dependent coefficient breaks time-invariance, not linearity. Superposition still holds for (i).

Q.21 MCQ · 1 MARK

Analog Electronics › Amplifiers

A common gate amplifier represents a _____.

(A) voltage controlled voltage source

(B) current controlled current source

(C) voltage controlled current source

(D) current controlled voltage source

Official answer: **B**

SOLUTION

1. **Classify by the terminal impedances.** An ideal dependent source is recognised by its input and output resistance. A *current*-controlled input has $R_{in} \to 0$, so it accepts a current without developing a voltage. A controlled *current* source has $R_{out} \to \infty$. So an ideal CCCS has $R_{in} = 0$ and $R_{out} = \infty$.
2. **Common-gate connection and model.** The gate is at ac ground, the input is applied at the source and the output is taken at the drain. Small-signal model: a dependent current $g_m v_{gs}$ flows from drain to source through the channel, and $v_{gs} = 0 - v_s = -v_s$ because the gate is grounded. Assumptions: body effect neglected, and channel-length modulation neglected at first ($r_o \to \infty$).
3. **Input resistance (looking into the source).** Apply a test voltage v_x at the source and let i_x be the current it pushes into the source node. With $r_o \to \infty$ the only path out of that node is the channel. The current flowing from source to drain through the channel is $-g_m v_{gs} = g_m v_x$, so KCL gives $i_x = g_m v_x$ and
$$R_{in} = \frac{v_x}{i_x} = \frac{1}{g_m}$$
This is small (for example $500\ \Omega$ at $g_m = 2\ \text{mA/V}$), so the stage takes a **current** as its input.
4. **Current gain.** The gate draws no current, so all the signal current entering the source flows through the channel and leaves at the drain: $i_d = i_s$. Hence
$$A_i = \frac{i_o}{i_{in}} \approx 1$$
The stage is a unity-gain current follower (current buffer).
5. **Output resistance (looking into the drain).** Now include r_o, and let the input be driven by a source with resistance R_S. The standard result is
$$R_{out} = r_o + (1 + g_m r_o) R_S$$
which is even larger than r_o. So the output behaves like a **current** source.
6. **Conclusion.** A low input resistance ($1/g_m$), an output current set by the input current ($A_i \approx 1$) and a very high output resistance are the two-port properties of a **current-controlled current source**. The answer is option (B).

KEY IDEA

Identify a single-transistor stage by what its input and output terminals look like. Common source (input at the high-resistance gate, output at the high-resistance drain) is a VCCS or transconductance stage. Common drain (high R_{in}, low $R_{out} \approx 1/g_m$) is a VCVS or voltage follower. Common gate (low $R_{in} \approx 1/g_m$, high R_{out}, $A_i \approx 1$) is a CCCS or current follower.

WATCH OUT FOR

Picking (C), voltage controlled current source, because the MOSFET law $i_d = g_m v_{gs}$ is a transconductance. That describes the device, and it fits the common-source stage, whose input is the high-resistance gate. In the common-gate stage the signal goes into the low-resistance source terminal ($R_{in} = 1/g_m$), so the input is naturally a current, and the same current comes out of the drain.

Q.22 MCQ · 1 MARK

Analog Electronics › Biasing

Q.22	In the circuit shown, the BJT has a β of 100. The base-emitter junction voltage is 0.65 V. The quiescent collector current, I_C is _____ mA. 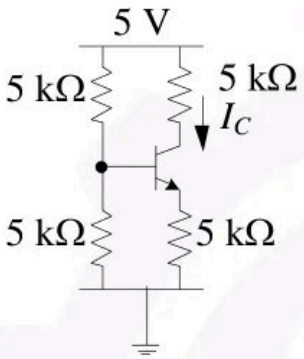
(A)	0.365
(B)	0.435
(C)	0.625
(D)	0.862

Official answer: **A**

SOLUTION

1. Assume the BJT is in forward-active mode, so $I_C = \beta I_B$ and $I_E = (\beta + 1) I_B$, with $V_{BE} = 0.65\ \text{V}$. We check this assumption at the end.
2. Replace the base divider with its Thevenin equivalent: $V_{TH} = 5 \cdot \dfrac{5}{5+5} = 2.5\ \text{V}$ and $R_{TH} = 5\,\text{k}\Omega \parallel 5\,\text{k}\Omega = 2.5\ \text{k}\Omega$.
3. Write KVL around the base-emitter loop, with $R_E = 5\ \text{k}\Omega$: $V_{TH} = I_B R_{TH} + V_{BE} + (\beta + 1) I_B R_E$.
4. Solve for the base current (working in V, kΩ and mA):
$$I_B = \frac{V_{TH} - V_{BE}}{R_{TH} + (\beta + 1) R_E} = \frac{2.5 - 0.65}{2.5 + 101 \times 5}\ \text{mA} = \frac{1.85}{507.5}\ \text{mA} \approx 3.645\ \mu\text{A}$$
5. Collector current: $I_C = \beta I_B = 100 \times 3.645\ \mu\text{A} \approx 0.365\ \text{mA}$.
6. Check the active-mode assumption. $I_E = 101 I_B \approx 0.368\ \text{mA}$, so $V_E \approx 0.368 \times 5 \approx 1.84\ \text{V}$ and $V_B = V_E + 0.65 \approx 2.49\ \text{V}$. Also $V_C = 5 - 0.365 \times 5 \approx 3.18\ \text{V}$. Then $V_{CE} \approx 1.34\ \text{V}$, which is well above

$V_{CE(sat)}$, and $V_C > V_B$, so the base-collector junction is reverse biased. The transistor is in forward-active mode, so the assumption holds. The answer is $I_C \approx 0.365\ \text{mA}$, option (A).

KEY IDEA

This is voltage-divider bias. Replace the divider with its Thevenin equivalent ($V_{TH} = 2.5\ \text{V}$, $R_{TH} = 2.5\ \text{k}\Omega$). The emitter resistor looks $(\beta + 1)$ times larger from the base, so $I_B = (V_{TH} - V_{BE})/[R_{TH} + (\beta + 1)R_E]$, and then $I_C = \beta I_B$. Always confirm active mode afterwards: $V_C > V_B$.

WATCH OUT FOR

One common slip is treating the divider as stiff: ignoring R_{TH} and taking $I_C \approx I_E = (2.5 - 0.65)/5 = 0.37\ \text{mA}$. That is close but is not one of the options. Another is forgetting the $(\beta + 1)$ factor that reflects R_E into the base loop, which gives a base current, and so a collector current, that is much too large.

Q.23 MCQ · 1 MARK

Digital Electronics › ADC & DAC

The maximum signal to quantization noise ratio (SQNR) for a 16-bit analog-to-digital converter is approximately _____ dB.

(A) 48

(B) 68

(C) 88

(D) 98

Official answer: **D**

SOLUTION

1. For an n-bit ADC with full-scale range V_{FS}, the step size is $\Delta = \dfrac{V_{FS}}{2^n}$. With rounding, the quantization error is uniformly distributed over $\left(-\dfrac{\Delta}{2}, \dfrac{\Delta}{2}\right)$, so the quantization noise power is $P_q = \dfrac{\Delta^2}{12}$.
2. The SQNR is maximum when the input is a sinusoid that just fills the full-scale range. Its peak-to-peak value is $2^n\Delta$, so its amplitude is $A = \dfrac{2^n\Delta}{2}$ and its power is $P_s = \dfrac{A^2}{2} = \dfrac{2^{2n}\Delta^2}{8}$.
3. $$\text{SQNR} = \frac{P_s}{P_q} = \frac{2^{2n}\Delta^2/8}{\Delta^2/12} = \frac{3}{2}\,2^{2n}$$
4. In decibels: $\text{SQNR}_{\text{dB}} = 10\log_{10}(1.5) + 20n\log_{10}2 = 1.76 + 6.02n\ \text{dB}$.
5. With $n = 16$: $\text{SQNR}_{\text{dB}} = 1.76 + 6.02 \times 16 = 1.76 + 96.33 \approx 98.1\ \text{dB}$.
6. The closest option is $98\ \text{dB}$, which is option (D).

KEY IDEA

For a full-scale sinusoid into an ideal n-bit quantizer, $\text{SQNR} = \dfrac{3}{2}\,2^{2n}$, which is $1.76 + 6.02n\ \text{dB}$. Each extra bit adds about $6\ \text{dB}$.

WATCH OUT FOR

Using $20\log_{10}(2^n) = 6.02n$ alone gives $96.3\ \text{dB}$ because it leaves out the $1.76\ \text{dB}$ from the sinusoid's power relative to the $\Delta^2/12$ noise. Here (D) is still the nearest option, but the correct maximum is $98.1\ \text{dB}$. A second slip is to use $10\log_{10}(2^n) \approx 3n$, which gives about $48\ \text{dB}$ and leads to the distractor (A).

Q.24 MCQ · 1 MARK

Electrical and Electronic Measurements › Bridges

The Kelvin double bridge is used to measure _____ valued resistances and has _____ resistors in its construction.

(A) low ; three-terminal

(B) low ; four-terminal

(C) high ; three-terminal

(D) high ; four-terminal

Official answer: **B**

SOLUTION

1. **Why a Wheatstone bridge fails here.** Lead and contact resistances are typically a few milliohms. Against a resistance of hundreds of ohms that is negligible. Against a resistance below $1\ \Omega$ it is not. A Wheatstone bridge would then read $R + r_{\text{leads}}$ instead of R, and the reading cannot be trusted.
2. **Kelvin's fix: a second pair of ratio arms.** The unknown R and the standard S are joined by a link (the yoke) of resistance r. Besides the outer ratio arms P, Q, a second pair of ratio arms p, q is connected across the ends of that link. The two sets of ratio arms are why it is called a *double* bridge.
3. **Balance condition.** Let the test current I flow through R, the link and S, and let p, q connect to the R-end and the S-end of the link. With zero detector current the link is in parallel with $(p+q)$, and equating the detector-node potentials gives
$$\frac{Q}{P+Q}\left[R + S + \frac{r(p+q)}{p+q+r}\right] = S + \frac{q\,r}{p+q+r}$$
which rearranges to
$$R = \frac{P}{Q}\,S + \frac{q\,r}{p+q+r}\left(\frac{P}{Q} - \frac{p}{q}\right)$$
4. **Making the link resistance drop out.** The ratio arms are ganged so that $\frac{P}{Q} = \frac{p}{q}$. The second term then vanishes, leaving $R = \frac{P}{Q}\,S$, which depends on neither r nor the lead resistance. This is the bridge used for resistances below about $1\ \Omega$, down into the $\mu\Omega$ range. The first blank is **low**.
5. **Four-terminal resistors.** Both R and S are built as four-terminal resistors. The two outer *current terminals* carry the test current. The two inner *potential terminals* mark out the resistance actually being measured and connect to the ratio arms: R to P and p, S to Q and q. The contact and lead drops at the current terminals therefore lie outside the measured section. The second blank is **four-terminal**.
6. **Ruling out the other options.** Three-terminal construction, where the third terminal is a guard that carries surface-leakage current around the detector, is the technique for **high** resistances such as insulation tests and the megohm bridge. That rules out (C) and (D), which say high, and (A), which pairs low with three-terminal. The answer is **(B)**: low; four-terminal.

KEY IDEA

For a low resistance, lead and contact resistance are comparable to the resistance being measured. The Kelvin double bridge removes them in two ways. The second pair of ratio arms, set so that $P/Q = p/q$, cancels the link resistance, leaving $R = (P/Q)\,S$. Four-terminal (current + potential) construction of R and S keeps the contact drops outside the measured section.

WATCH OUT FOR

Mixing up the two terminal techniques. Four-terminal (Kelvin) connection handles LOW resistances by excluding lead and contact drops. Three-terminal (guard) connection handles HIGH resistances by bypassing surface-leakage current. The word "double" may also suggest two measurements or a high range, which pulls students toward (C) or (D).

Q.25 MCQ · 1 MARK

Sensors and Industrial Instrumentation › Sensing principles

Active strain gauges are connected in a half-bridge configuration to measure strain in a cantilever element. When powered by a voltage source of 10 V, the voltage at the output of the bridge is 1 mV. If the gauge factor is 2.5, the strain in the cantilever element is _____ microstrain.

(A) 40

(B) 80

(C) 20

(D) 160

Official answer: **B**

SOLUTION

1. Half-bridge with two active gauges: the gauges occupy two adjacent arms of the Wheatstone bridge, and the other two arms are fixed resistors R. On the cantilever one gauge is in tension and the other in compression, so their resistances become $R + \Delta R$ and $R - \Delta R$.
2. Gauge factor: $G = \dfrac{\Delta R/R}{\varepsilon}$, so $\dfrac{\Delta R}{R} = G\varepsilon$.
3. The two active gauges form one voltage divider, whose output is $V_{ex}\dfrac{R+\Delta R}{(R+\Delta R)+(R-\Delta R)} = V_{ex}\dfrac{R+\Delta R}{2R}$. The two fixed resistors give a reference of $\dfrac{V_{ex}}{2}$. The bridge output is
$$V_o = V_{ex}\left[\frac{R+\Delta R}{2R} - \frac{1}{2}\right] = \frac{V_{ex}}{2}\,\frac{\Delta R}{R}.$$
4. Substituting $\Delta R/R = G\varepsilon$ gives $\dfrac{V_o}{V_{ex}} = \dfrac{G\varepsilon}{2}$, so
$$\varepsilon = \frac{2V_o}{G\,V_{ex}}.$$
5. With $V_o = 1\ \text{mV} = 1\times10^{-3}\ \text{V}$, $V_{ex} = 10\ \text{V}$ and $G = 2.5$:
$$\varepsilon = \frac{2\times1\times10^{-3}\ \text{V}}{2.5\times10\ \text{V}} = 8\times10^{-5}.$$
6. $\varepsilon = 80\ \mu\text{strain}$, which is option (B).

KEY IDEA

A half-bridge with two active gauges in adjacent arms (one in tension, one in compression) gives $V_o/V_{ex} = G\varepsilon/2$. This is twice the output of a quarter-bridge ($G\varepsilon/4$).

WATCH OUT FOR

Using the quarter-bridge formula $V_o/V_{ex} = G\varepsilon/4$ gives 160 microstrain (option D). Using the full-bridge formula $V_o/V_{ex} = G\varepsilon$ gives 40 microstrain (option A).

Q.26 MCQ · 1 MARK

Sensors and Industrial Instrumentation › Level & analytical

A glass pH electrode behaves linearly with an output change of 60 mV per unit change in pH. The measurement reference is set such that a solution of pH 6 produces an output of 60 mV. The pH of a solution that results in an output of −90 mV is _____ .

(A) 3.5

(B) 3

(C) 8

(D) 8.5

Official answer: **D**

SOLUTION

1. A glass pH electrode follows the Nernst equation. Its potential depends on the hydrogen-ion activity:
$$E = E_0 + \frac{2.303RT}{F}\log_{10} a_{H^+} = E_0 - \frac{2.303RT}{F}\,\text{pH}$$
So the output **falls** as pH **rises**. The slope is negative.
2. The question gives the size of the slope as $60\ \text{mV}$ per pH unit, so the sensitivity is $S = -60\ \text{mV/pH}$. The linear model about the reference point is $V = V_{\text{ref}} - 60\,(\text{pH} - \text{pH}_{\text{ref}})$ in mV.
3. Reference point: at $\text{pH} = 6$ the output is $60\ \text{mV}$, so
$$V = 60 - 60\,(\text{pH} - 6)\ \text{mV}$$

4. Set the output to $-90\ \text{mV}$:
$$-90 = 60 - 60\,(\text{pH} - 6)$$
5. Rearrange: $60\,(\text{pH} - 6) = 150$, so $\text{pH} - 6 = 2.5$.
6. Result: $\text{pH} = 6 + 2.5 = 8.5$.
7. Check: going from $60\ \text{mV}$ to $-90\ \text{mV}$ is a change of $-150\ \text{mV}$, which is 2.5 pH units at $60\ \text{mV/pH}$. A more negative output means a less acidic solution, so the pH rises from 6 to 8.5. The answer is (D).

KEY IDEA
By the Nernst equation, a glass electrode's potential is $E = E_0 - (2.303RT/F)\,\text{pH}$, so its slope against pH is negative (about $-59\ \text{mV/pH}$ at 25°C). A more negative output means a higher pH, i.e. a more alkaline solution.

WATCH OUT FOR
Taking the slope as $+60\ \text{mV/pH}$ just because the question says "60 mV per unit change in pH" gives $\text{pH} = 3.5$, option (A). That sign is the wrong way round for a glass electrode: its output drops as pH rises, so a fall from $60\ \text{mV}$ to $-90\ \text{mV}$ means the pH goes up.

Q.27 MCQ · 1 MARK

Communications › Digital communication

An analog speech signal contains signals from 200 Hz to 2400 Hz. It is sampled at 6 kHz and quantized with 512 levels for pulse code modulation (PCM). The bit rate will be _____ kbps.

(A) 16
(B) 48
(C) 19.2
(D) 54

Official answer: **D**

SOLUTION

1. The sampling rate is given directly as $f_s = 6\ \text{kHz}$. It is above the Nyquist rate $2 \times 2400 = 4.8\ \text{kHz}$, so the stated rate is used as it is.
2. Bits per sample for L quantization levels: $n = \log_2 L = \log_2 512 = 9$ bits.
3. The PCM bit rate is the number of bits per sample times the number of samples per second: $R_b = n\,f_s$.
4. $$R_b = 9 \times 6000 = 54000\ \text{bits/s} = 54\ \text{kbps}$$
5. This matches option (D).

KEY IDEA
The PCM bit rate is the sampling rate times the bits per sample, $R_b = f_s \log_2 L$. Use the sampling rate the question gives, not the Nyquist rate.

WATCH OUT FOR
Using the Nyquist rate $2f_m = 4.8\ \text{kHz}$ instead of the stated 6 kHz gives $9 \times 4.8 = 43.2$ kbps, which is not an option. Counting 512 levels as 512 bits per sample, or as 8 bits, is also wrong. The bits per sample are $\log_2 512 = 9$.

Q.28 MCQ · 1 MARK

Sensors and Industrial Instrumentation › Optical

The slope efficiency of a laser diode is 0.5 W/A, and the output optical power at a current of 100 mA is 30 mW. Assuming piece-wise linear characteristics of the laser diode, the threshold current of the laser is _____ mA.

(A) 0
(B) 20
(C) 40

(D) 60

Official answer: **C**

SOLUTION

1. Above threshold, the piece-wise linear light-current characteristic is $P = \eta_s\,(I - I_{th})$, and the output is zero below I_{th}.
2. Given: $\eta_s = 0.5\ \text{W/A}$, $I = 100\ \text{mA}$, $P = 30\ \text{mW}$.
3. P is non-zero, so the diode is operating above threshold and the linear relation applies.
4. The current above threshold is
$$I - I_{th} = \frac{P}{\eta_s} = \frac{30 \times 10^{-3}\ \text{W}}{0.5\ \text{W/A}} = 60\ \text{mA}$$
5. The threshold current is
$$I_{th} = 100\ \text{mA} - 60\ \text{mA} = 40\ \text{mA}$$
6. This is option (C).

KEY IDEA

Above threshold a laser diode's output is $P = \eta_s(I - I_{th})$. Slope efficiency is the slope of the P-I line, so the line meets the current axis at I_{th}. Divide the power by the slope to get the current above threshold, then subtract that from the drive current.

WATCH OUT FOR

Mixing units: 30 mW divided by 0.5 W/A is 60 mA, not 60 A. Another error is taking 60 mA as the threshold itself (option D) when it is the current above threshold. A third is assuming the line passes through the origin (option A), which would give a threshold of 0.

Q.29 MSQ · 1 MARK

Electrical and Electronic Measurements › Errors & standards

In a linear element, the measured current is $100\ \text{mA} \pm 2.5\%$ and the measured voltage is $5\ \text{V} \pm 5\%$. Which of the following options show(s) the consumed power?

(A) $(500 \pm 37.5)\ \text{mW}$

(B) $(500 \pm 12.5)\ \text{mW}$

(C) $500\ \text{mW} \pm 7.5\%$

(D) $500\ \text{mW} \pm 2.5\%$

Official answer: **A, C**

SOLUTION

1. Nominal power: $P = VI = 5\ \text{V} \times 100\ \text{mA} = 500\ \text{mW}$.
2. Rule for a product: taking logarithms, $\ln P = \ln V + \ln I$, so $\frac{dP}{P} = \frac{dV}{V} + \frac{dI}{I}$. A limiting (guaranteed) error assumes the worst case, where both errors push the same way, so the relative limiting errors add in magnitude: $\frac{\delta P}{P} = \pm\left(\left|\frac{\delta V}{V}\right| + \left|\frac{\delta I}{I}\right|\right)$.
3. Substituting: $\frac{\delta P}{P} = \pm(5\% + 2.5\%) = \pm 7.5\%$, so $P = 500\ \text{mW} \pm 7.5\%$. Option (C) is correct.
4. In absolute terms: $\delta P = 0.075 \times 500\ \text{mW} = 37.5\ \text{mW}$, so $P = (500 \pm 37.5)\ \text{mW}$. This is the same result as (C) written as an absolute error, so option (A) is also correct.
5. Check by extremes: $P_{\max} = 5.25\ \text{V} \times 102.5\ \text{mA} = 538.125\ \text{mW}$ (that is $+7.625\%$) and $P_{\min} = 4.75\ \text{V} \times 97.5\ \text{mA} = 463.125\ \text{mW}$ (that is -7.375%). The exact extremes differ from $\pm 7.5\%$ only by the cross-product term $(0.05)(0.025) = 0.125\%$ of P, which is $0.625\ \text{mW}$. For small errors this second-order term is neglected, which is why the standard limiting error is $\pm 7.5\%$, i.e. $\pm 37.5\ \text{mW}$.

6. Options (B) and (D) say the same thing: $\frac{12.5}{500} = 2.5\%$. That equals the current's error alone, or the difference $5\% - 2.5\%$. It is not the sum of the errors, so both options are wrong. (The root-sum-square value, $\sqrt{5^2 + 2.5^2}\,\% \approx 5.59\%$, is not offered either.)

KEY IDEA

When quantities are multiplied or divided, their limiting (worst-case) relative errors add in magnitude. For $P = VI$: $\pm(5\% + 2.5\%) = \pm 7.5\%$ of $500\ \mathrm{mW}$, which is $\pm 37.5\ \mathrm{mW}$. An MSQ can list the same result twice, once as a percentage and once as an absolute error, and then both options are correct.

WATCH OUT FOR

Picking only one of (A) and (C) when they state the same error in two forms. Another mistake is subtracting the relative errors ($5\% - 2.5\% = 2.5\%$, giving (B)/(D)) or taking the root-sum-square ($\approx 5.59\%$). A limiting error is worst-case, so the magnitudes add.

Q.30 MSQ · 1 MARK

Sensors and Industrial Instrumentation › Temperature

Which of the following statements is/are correct for a thermocouple?

(A) It is based on the Seebeck Effect.

(B) The change in resistance is measured.

(C) The voltage difference between the two junctions is linearly proportional to the temperature difference between the junctions.

(D) It is based on the concept of Joule Heating.

Official answer: **A**

SOLUTION

1. A thermocouple is two dissimilar metals joined at two junctions: a measuring (hot) junction at T_1 and a reference (cold) junction at T_2, often held at $0^\circ\mathrm{C}$. When $T_1 \neq T_2$ a thermo-emf appears in the loop. This is the **Seebeck effect**, so (A) is correct.
2. A thermocouple is a self-generating (active) sensor: its output is a voltage, and no change in resistance is measured. Measuring a change in resistance describes an RTD or a thermistor. (B) is wrong.
3. The Seebeck coefficient $S = \frac{dE}{dT}$ is itself a function of temperature, so the emf is $E = \int_{T_2}^{T_1} S(T)\,dT$, not a constant times $(T_1 - T_2)$. Over a working range it is described by a polynomial, $E = a(T_1 - T_2) + b(T_1 - T_2)^2 + \ldots$ (with the reference junction at T_2), which is why reference tables or polynomial correction are needed to convert emf to temperature.
4. So the emf is only approximately proportional to the temperature difference over a narrow range; in general the relation is non-linear. Statement (C), which states a linear proportionality without qualification, is therefore wrong.
5. Joule heating is I^2R dissipation in a conductor carrying current. It is a loss effect and is not the working principle of a thermocouple; it does not depend on the direction of current or on a junction of dissimilar metals. (D) is wrong.
6. Only statement (A) is correct.

KEY IDEA

A thermocouple is a self-generating sensor based on the Seebeck effect. Its emf is $E = \int_{T_2}^{T_1} S(T)\,dT$, and because the Seebeck coefficient S varies with temperature, the emf-temperature relation is non-linear (a polynomial). It is only approximately linear over a small range.

WATCH OUT FOR

Treating the first-order approximation $E \approx S(T_1 - T_2)$ as exact and marking (C). The thermocouple characteristic is non-linear, which is why reference tables and polynomial fits are used. Another slip is confusing a thermocouple with an RTD (resistance change) or naming Joule heating instead of the Seebeck effect.

Q.31 NAT · 1 MARK

Engineering Mathematics › Probability & statistics

A data set is given to be $[1, 2, 0, -1, -3, 1, 2, 0, 1]$.

The median of the data set is ____. *(rounded off to the nearest integer)*

Official answer: **1**

SOLUTION

1. Count the observations. There are $n = 9$ values. Since n is odd, the median is a single middle value, not the average of two.
2. Sort the data in ascending order:
$$-3,\ -1,\ 0,\ 0,\ 1,\ 1,\ 1,\ 2,\ 2$$
(Check: the list still has nine entries, with one -3, one -1, two 0s, three 1s and two 2s, the same as the given set.)
3. For odd n the median is at position $\dfrac{n+1}{2} = \dfrac{9+1}{2} = 5$, so take the 5th value of the sorted list.
4. Read off the 5th value. The first four are $-3, -1, 0, 0$, and the 5th is 1. So the median is 1.
5. Check: four values $(-3, -1, 0, 0)$ sit before the 5th position and four $(1, 1, 2, 2)$ sit after it, so the median splits the data in half as it should. 1 is already an integer, so rounding leaves it unchanged.

KEY IDEA

The median is the middle value of the data once it is sorted. For an odd count n it is the value at position $\frac{n+1}{2}$ in the sorted list, and repeated values each keep their own place.

WATCH OUT FOR

Taking the middle entry of the list as printed, without sorting it first. The 5th printed entry is -3, which is wrong. Two other slips: collapsing repeated values into one (the distinct values $-3, -1, 0, 1, 2$ have middle 0, also wrong), and giving the mean $(3/9 \approx 0.33$, which rounds to $0)$ when the question asks for the median.

Q.32 NAT · 1 MARK

Networks (Electric Circuits) › Laws & node/mesh

The potential difference between nodes A and B in a circuit is $v_A - v_B = 5$ V. The work done in moving a charge of 1 coulomb from point B to A is ____ J. *(answer in integer)*

Official answer: **5**

SOLUTION

1. Definition of potential difference: $v_A - v_B$ is the work done per unit charge (by an external agent, against the field) in moving a charge from B to A. So $W_{B\to A} = q\,(v_A - v_B)$.
2. Given: $q = 1$ C and $v_A - v_B = 5$ V.
3. $$W_{B\to A} = q\,(v_A - v_B) = (1\text{ C})(5\text{ V}) = 5\text{ J}$$
4. Sign check: the charge goes from the lower-potential node B up to the higher-potential node A, so energy has to be supplied to it and the work done is positive, $+5$ J. (Moving it the other way, from A to B, would give -5 J, meaning the field does the work.)

KEY IDEA

One volt is one joule per coulomb. The potential difference $v_A - v_B$ is the work needed per coulomb to move a charge from B to A, so $W_{B\to A} = q\,(v_A - v_B)$.

WATCH OUT FOR

Getting the direction backwards. Some students use $v_B - v_A$ and answer -5. Others think the charge goes "downhill" from B to A. A is 5 V above B, so moving a positive charge from B to A needs $+5$ J of work.

Q.33 NAT · 1 MARK

Networks (Electric Circuits) › AC, power & resonance

Q.33 In a series RL circuit shown in the figure, the current through the resistor lags the AC source voltage by 45°. Let $R = 100\pi\ \Omega$ and $L = 2$ H.

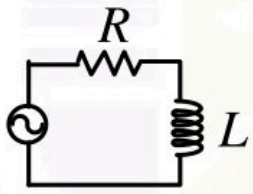

The frequency of the source is ____ Hz. *(rounded off to the nearest integer)*

Official answer: **25**

SOLUTION

1. **Series circuit, one current.** R and L carry the same current, so the current through the resistor is the circuit current. The impedance is $Z = R + j\omega L$.
2. **Phase angle of a series RL circuit.** With the source voltage as reference, $I = \dfrac{V}{Z}$, so the current lags the source voltage by the angle of Z:
$$\phi = \tan^{-1}\left(\frac{\omega L}{R}\right)$$
3. **Use the 45° condition.** $\phi = 45^\circ$ gives $\tan 45^\circ = 1$, so $X_L = R$:
$$\omega L = R \;\Rightarrow\; \omega = \frac{R}{L} = \frac{100\pi}{2} = 50\pi\ \text{rad/s}$$
4. **Convert angular frequency to hertz.**
$$f = \frac{\omega}{2\pi} = \frac{50\pi}{2\pi} = 25\ \text{Hz}$$
5. **Check.** At $f = 25$ Hz, $X_L = 2\pi(25)(2) = 100\pi\ \Omega = R$. So $Z = 100\pi\sqrt{2}\angle 45^\circ\ \Omega$ and the current lags the voltage by 45°, as the question says. The answer is exactly 25, so no rounding is needed.

KEY IDEA

In a series RL circuit the current lags the source voltage by $\tan^{-1}(\omega L/R)$. A 45° lag means $X_L = R$, so $f = \dfrac{R}{2\pi L}$. Here the π in $R = 100\pi\ \Omega$ cancels the π in 2π.

WATCH OUT FOR

Stopping at $\omega = R/L = 50\pi \approx 157$ and entering that as the answer. That number is the angular frequency in rad/s, not the frequency in Hz. Another slip is to drop the π from R and get $f = 100/(4\pi) \approx 8$ Hz.

Q.34 NAT · 1 MARK

Analog Electronics › Diode circuits

Q.34 In the circuit below the maximum value of v_{out} is _____ V. *(rounded off to the nearest integer)*

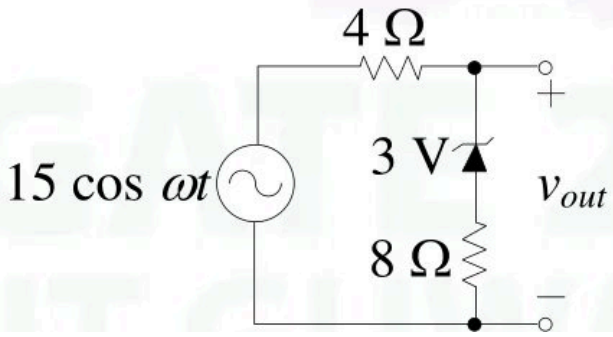

Official answer: **11**

SOLUTION

1. Model: take the Zener as ideal. It is an open circuit when reverse biased below $V_Z = 3\ \text{V}$. In reverse breakdown it holds exactly $3\ \text{V}$, and forward biased it is a short (zero forward drop). Its cathode is at the output node and its anode goes to the $8\ \Omega$ resistor, so it is reverse biased whenever $v_{out} > 0$. Let $v_s = 15\cos\omega t$. The source swings through both signs, so both half cycles occur whichever terminal is taken as positive.
2. Positive half cycle, $0 < v_s < 3\ \text{V}$: the Zener has not broken down, so the Zener and $8\ \Omega$ branch carries no current. No current flows in the $4\ \Omega$ resistor, so it drops nothing and $v_{out} = v_s$. The $8\ \Omega$ resistor also drops nothing, so the whole of v_{out} appears across the Zener, and breakdown starts when v_s reaches $3\ \text{V}$.
3. Positive half cycle, $v_s > 3\ \text{V}$: the Zener is in breakdown and acts as a $3\ \text{V}$ battery in series with the two resistors. KVL around the loop gives the current flowing down through the branch:
$$i = \frac{v_s - 3}{4 + 8} = \frac{v_s - 3}{12}$$
This is positive for $v_s > 3\ \text{V}$, which confirms the Zener really is in reverse breakdown.
4. The output is taken across the Zener and the $8\ \Omega$ resistor together:
$$v_{out} = 3 + 8i = 3 + \frac{2}{3}(v_s - 3) = \frac{2v_s}{3} + 1$$
5. This rises with v_s, so it is largest at the source peak $v_s = 15\ \text{V}$:
$$i = \frac{15 - 3}{12} = 1\ \text{A}, \qquad v_{out} = 3 + 8(1) = 11\ \text{V}$$
6. Negative half cycle: the Zener is forward biased and acts as a short, so the two resistors form a voltage divider: $v_{out} = \frac{8}{12}v_s$. Its lowest value is $-10\ \text{V}$, at $v_s = -15\ \text{V}$. This half cycle never gives a positive output, and a small forward drop would not change that. So
$$v_{out,\max} = 11\ \text{V}$$

KEY IDEA

The Zener is in series with the $8\ \Omega$ resistor and does not sit directly across the output, so it does not clamp v_{out} at $3\ \text{V}$. Once it breaks down it behaves like a $3\ \text{V}$ battery. The output is then that $3\ \text{V}$ plus the drop across the $8\ \Omega$ resistor, which keeps rising with the source: $v_{out} = \dfrac{2v_s}{3} + 1$.

WATCH OUT FOR

One mistake is to treat the Zener as a clamp across the output and answer $3\ \text{V}$, which ignores the $8\ \Omega$ drop in series with it. Another is to apply the voltage divider to the whole peak, $\frac{8}{12} \times 15 = 10\ \text{V}$, which leaves the Zener's $3\ \text{V}$ out of the loop. That value is actually the size of the negative-half-cycle extreme, not the positive maximum.

Q.35 NAT · 1 MARK

Digital Electronics › ADC & DAC

The minimum number of comparators required in a 6-bit flash analog-to-digital converter is _____. (answer in integer)

Official answer: **63**

SOLUTION

1. A flash (parallel) ADC with n output bits divides the full-scale input range into 2^n quantisation levels. Between 2^n adjacent levels there are $2^n - 1$ decision thresholds.
2. Each threshold needs its own comparator. A resistor ladder sets the reference voltage for each comparator. All the comparators switch at once and produce a thermometer code, and a priority encoder turns that code into the n-bit binary output.
3. So the number of comparators in an n-bit flash ADC is $2^n - 1$.
4. For $n = 6$:
$$2^6 - 1 = 64 - 1 = 63$$
5. A 6-bit flash ADC needs at least 63 comparators.

KEY IDEA

An n-bit flash ADC compares the input against every decision threshold at once, with one comparator per threshold. 2^n levels have $2^n - 1$ thresholds between them, so it needs $2^n - 1$ comparators. This count doubles with every added bit, which is why flash converters are fast but expensive at high resolution.

WATCH OUT FOR

Answering $2^6 = 64$ (counting levels instead of the thresholds between them), or answering 6 (mixing up the flash ADC with a successive-approximation ADC, which uses a single comparator for n clock cycles). The resistor ladder has 2^n resistors, but it needs only $2^n - 1$ comparators.

Q.36 MCQ · 2 MARKS

Engineering Mathematics › Probability & statistics

A box contains three apples and two oranges. Two fruits are removed randomly in succession. The probability that the first is an apple and the second is an orange is _____ .

(A) $\dfrac{3}{5}$
(B) $\dfrac{3}{20}$
(C) $\dfrac{3}{10}$
(D) $\dfrac{2}{5}$

Official answer: **C**

SOLUTION

1. The box holds 3 apples and 2 oranges, 5 fruits in all. "Removed in succession" means the first fruit is not put back before the second is drawn, so this is drawing **without replacement**. Let A_1 be "first fruit

is an apple" and O_2 be "second fruit is an orange".

2. First draw: $P(A_1) = \frac{3}{5}$.
3. Once an apple is out, 4 fruits are left, and all 2 oranges are still among them. So $P(O_2 \mid A_1) = \frac{2}{4} = \frac{1}{2}$.
4. Multiplication rule for dependent events:
$$P(A_1 \cap O_2) = P(A_1)\,P(O_2 \mid A_1) = \frac{3}{5} \cdot \frac{2}{4} = \frac{6}{20} = \frac{3}{10}$$
5. Check by counting ordered pairs: there are $5 \times 4 = 20$ equally likely ordered draws, and $3 \times 2 = 6$ of them are (apple, orange). So the probability is $\frac{6}{20} = \frac{3}{10}$, which is option (C).

KEY IDEA

Drawing in succession means drawing without replacement, so the events are dependent. For a specified order, multiply the probability of the first draw by the conditional probability of the second draw given the first: $P(A_1 \cap O_2) = P(A_1)\,P(O_2 \mid A_1)$. Counting ordered pairs (6 favourable out of $5 \times 4 = 20$) gives the same answer.

WATCH OUT FOR

Each wrong option matches a specific slip. (A) $\frac{3}{5}$ is $P(\text{first is an apple})$ on its own. It is also the probability of one apple and one orange in either order, $2 \times \frac{3}{10}$, so it is what you get if you ignore the order the question asks for. (D) $\frac{2}{5}$ is the probability of drawing an orange from the full box. Treating the draws as independent (with replacement) gives $\frac{3}{5} \cdot \frac{2}{5} = \frac{6}{25}$, which is not an option. That is a sign the second draw has to use the 4 fruits left in the box.

Q.37 MCQ · 2 MARKS

Electromagnetics › Electrostatics

An electric field in free space is

$$\mathbf{E} = (2x + 5y + 6z)\,\hat{i} + (5x + 4y + 10z)\,\hat{j} + (6x + 10y + 2z)\,\hat{k}\ \mathrm{V/m}.$$

The charge density is ___ $\mathrm{C/m^3}$. (ϵ_0 is the permittivity of free space)

(A) $8\epsilon_0$

(B) $10\epsilon_0$

(C) $6\epsilon_0$

(D) $4\epsilon_0$

Official answer: **A**

SOLUTION

1. Use the point form of Gauss's law in free space: $\nabla \cdot \mathbf{D} = \rho_v$ with $\mathbf{D} = \epsilon_0 \mathbf{E}$, so $\rho_v = \epsilon_0\, \nabla \cdot \mathbf{E}$, where $\epsilon_0 \approx 8.854 \times 10^{-12}\ \mathrm{F/m}$.
2. The divergence uses only the diagonal derivatives, each component differentiated with respect to its own coordinate: $\nabla \cdot \mathbf{E} = \frac{\partial E_x}{\partial x} + \frac{\partial E_y}{\partial y} + \frac{\partial E_z}{\partial z}$.
3. Compute each term: $\frac{\partial}{\partial x}(2x + 5y + 6z) = 2$, $\frac{\partial}{\partial y}(5x + 4y + 10z) = 4$, $\frac{\partial}{\partial z}(6x + 10y + 2z) = 2$.
4. So $\nabla \cdot \mathbf{E} = 2 + 4 + 2 = 8\ \mathrm{V/m^2}$. It is a constant, so the charge density is the same at every point.
5. Check that the field is a valid electrostatic field ($\nabla \times \mathbf{E} = 0$): $\frac{\partial E_z}{\partial y} - \frac{\partial E_y}{\partial z} = 10 - 10 = 0$, $\frac{\partial E_x}{\partial z} - \frac{\partial E_z}{\partial x} = 6 - 6 = 0$, $\frac{\partial E_y}{\partial x} - \frac{\partial E_x}{\partial y} = 5 - 5 = 0$. The curl is zero, so the field is conservative, as a static field has to be.
6. Therefore

$$\rho_v = \epsilon_0\,(8) = 8\epsilon_0\ \mathrm{C/m^3},$$

which is option (A).

KEY IDEA

In free space, the point form of Gauss's law gives $\rho_v = \epsilon_0\,\nabla\cdot\mathbf{E}$. Only the diagonal terms count: $\partial E_x/\partial x$, $\partial E_y/\partial y$ and $\partial E_z/\partial z$. The off-diagonal coefficients (5, 6, 10) do not affect the charge density. Here they are symmetric, which is exactly the condition for $\nabla\times\mathbf{E}=0$.

WATCH OUT FOR

Adding every coefficient, or picking up the off-diagonal ones (for example $\partial E_y/\partial z = 10$), gives distractors such as $10\epsilon_0$. The divergence takes only the x-derivative of E_x, the y-derivative of E_y and the z-derivative of E_z. Another slip is dividing by ϵ_0 instead of multiplying: $\rho_v = \epsilon_0\nabla\cdot\mathbf{E}$, not $\nabla\cdot\mathbf{E}/\epsilon_0$.

Q.38 MCQ · 2 MARKS

Electromagnetics › Magnetostatics

A straight thin wire carrying a current of $I = 1$ A in the direction $\hat{n} = \frac{1}{\sqrt{6}}\hat{i} + \frac{2}{\sqrt{6}}\hat{j} + \frac{1}{\sqrt{6}}\hat{k}$ is placed inside a magnetic field of $\vec{B} = (2\hat{i} + 2\hat{k})$ T. The force per unit length on the wire is _____ N/m.

(A) $2\sqrt{6}\,\hat{i} - 2\sqrt{6}\,\hat{k}$

(B) $\sqrt{\frac{3}{2}}\,\hat{i} - \sqrt{\frac{3}{4}}\,\hat{j} + \sqrt{\frac{3}{4}}\,\hat{k}$

(C) $\frac{4}{\sqrt{6}}\,\hat{i} - \frac{4}{\sqrt{6}}\,\hat{k}$

(D) $\sqrt{\frac{3}{2}}\,\hat{i} + \sqrt{\frac{3}{4}}\,\hat{j} + \sqrt{\frac{3}{4}}\,\hat{k}$

Official answer: **C**

SOLUTION

1. The force on a straight wire of length L carrying current I in a uniform field is $\mathbf{F} = I\,\mathbf{L}\times\mathbf{B}$ with $\mathbf{L} = L\,\hat{n}$. So the force per unit length is $\dfrac{\mathbf{F}}{L} = I\,\hat{n}\times\mathbf{B}$, with $I = 1$ A.
2. In components, $\hat{n} = \dfrac{1}{\sqrt{6}}(1,\,2,\,1)$ and $\mathbf{B} = (2,\,0,\,2)$ T. Check: $|\hat{n}| = \sqrt{(1+4+1)/6} = 1$, so $\hat{n}$ is already a unit vector and needs no further normalising.
3. Write the cross product as a determinant:
$$\hat{n}\times\mathbf{B} = \frac{1}{\sqrt{6}}\begin{vmatrix}\hat{i} & \hat{j} & \hat{k}\\ 1 & 2 & 1\\ 2 & 0 & 2\end{vmatrix}$$
4. Expand it: $\hat{i}\,(2\cdot 2 - 1\cdot 0) - \hat{j}\,(1\cdot 2 - 1\cdot 2) + \hat{k}\,(1\cdot 0 - 2\cdot 2) = 4\hat{i} + 0\,\hat{j} - 4\hat{k}$.
5. So, with $I = 1$ A:
$$\frac{\mathbf{F}}{L} = \frac{4}{\sqrt{6}}\,\hat{i} - \frac{4}{\sqrt{6}}\,\hat{k}\ \mathrm{N/m}$$
6. Check the direction. The force must be perpendicular to both the wire and the field: $(4, 0, -4)\cdot(1, 2, 1) = 4 - 4 = 0$ and $(4, 0, -4)\cdot(2, 0, 2) = 8 - 8 = 0$. Both dot products are zero.
7. Check the magnitude with $|\mathbf{F}|/L = I|\mathbf{B}|\sin\theta$. Here $|\mathbf{B}| = 2\sqrt{2}$ and $\cos\theta = \dfrac{\hat{n}\cdot\mathbf{B}}{|\mathbf{B}|} = \dfrac{4/\sqrt{6}}{2\sqrt{2}} = \dfrac{1}{\sqrt{3}}$, so $\sin\theta = \sqrt{2/3}$. That gives $|\mathbf{F}|/L = 2\sqrt{2}\cdot\sqrt{2/3} = \dfrac{4}{\sqrt{3}}$ N/m, the same as $\sqrt{(4/\sqrt{6})^2 + (4/\sqrt{6})^2} = \sqrt{16/3}$.
8. Rule out the other options. The force has no $\hat{j}$ component, which excludes (B) and (D); neither of them is perpendicular to $\mathbf{B}$ anyway. (A) points the same way as (C) but is 3 times larger, since $2\sqrt{6} = 12/\sqrt{6}$. Its magnitude, $4\sqrt{3} \approx 6.93$ N/m, is more than the largest possible value $I|\mathbf{B}| = 2\sqrt{2} \approx 2.83$ N/m. Only (C) is left.

KEY IDEA

For a straight wire in a uniform field, $\mathbf{F}/L = I\,\hat{n} \times \mathbf{B}$. The force is perpendicular to both the wire and the field, and its size can never be more than $I|\mathbf{B}|$. Those two facts rule out wrong options before you finish the cross product.

WATCH OUT FOR

Common mistakes are reversing the order to $\mathbf{B} \times \hat{n}$, which flips the sign to $-\frac{4}{\sqrt{6}}\hat{i} + \frac{4}{\sqrt{6}}\hat{k}$, and dropping or mis-handling the $1/\sqrt{6}$ factor in $\hat{n}$, which gives a vector in the right direction with the wrong size, like option (A). A quick check: the force must be perpendicular to $\mathbf{B}$, and its magnitude cannot be more than $I|\mathbf{B}| = 2\sqrt{2}\ \mathrm{N/m}$.

Q.39 MCQ · 2 MARKS

Networks (Electric Circuits) › Two-port

Q.39 A two-port network has z-parameters $z_{11} = z_{22} = 10\ \Omega$, and $z_{12} = z_{21} = 5\ \Omega$.

The value of R_L such that maximum power is transferred to R_L is _____ Ω.

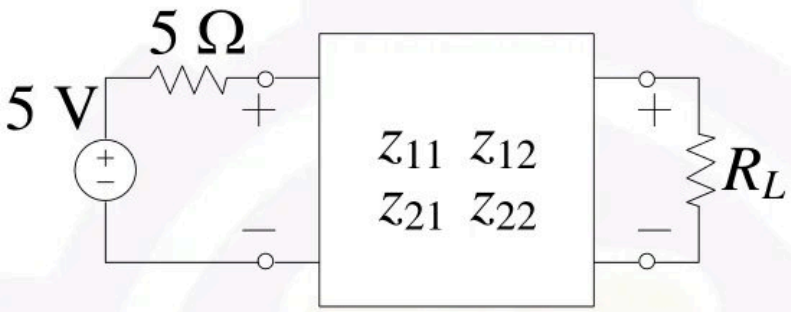

(A)	5.67
(B)	8.33
(C)	10.33
(D)	25.67

Official answer: **B**

SOLUTION

1. Port equations from the z-parameters, with both port currents taken as flowing into the network: $V_1 = z_{11}I_1 + z_{12}I_2 = 10I_1 + 5I_2$ and $V_2 = z_{21}I_1 + z_{22}I_2 = 5I_1 + 10I_2$.
2. Source constraint at port 1 (KVL around the 5 V source and the $5\ \Omega$ resistor): $V_1 = 5 - 5I_1$.

3. To find the Thevenin impedance seen by R_L, kill the 5 V source (replace it with a short) and drive port 2 with a test source V_2 that pushes current I_2 into the network. Port 1 is now loaded only by the $5\ \Omega$ resistor, so $V_1 = -5I_1$.
4. Substitute into the first port equation: $-5I_1 = 10I_1 + 5I_2$, so $-15I_1 = 5I_2$ and $I_1 = -\dfrac{I_2}{3}$.
5. Substitute I_1 into the second port equation: $V_2 = 5\left(-\dfrac{I_2}{3}\right) + 10I_2 = \dfrac{25}{3}I_2$. Hence
$$Z_{th} = \frac{V_2}{I_2} = z_{22} - \frac{z_{12}z_{21}}{z_{11} + R_s} = 10 - \frac{25}{15} = \frac{25}{3}\ \Omega.$$
6. Maximum power transfer theorem: with a purely resistive Thevenin impedance, a resistive load draws maximum power when $R_L = Z_{th} = \dfrac{25}{3} \approx 8.33\ \Omega$, which is option (B). The open-circuit voltage, $V_{th} = z_{21}I_1\big|_{I_2=0} = 5 \cdot \dfrac{5}{10+5} = \dfrac{5}{3}$ V, sets how much power reaches the load but does not change the value of R_L that maximises it.

KEY IDEA

Set R_L equal to the Thevenin impedance at port 2. That impedance is the network's output impedance with the source's own $5\ \Omega$ resistance (R_s) loading port 1: $Z_{out} = z_{22} - \dfrac{z_{12}z_{21}}{z_{11} + R_s}$.

WATCH OUT FOR

Leaving out the source resistance: $z_{22} - \dfrac{z_{12}z_{21}}{z_{11}} = 10 - 2.5 = 7.5\ \Omega$. Taking $R_L = z_{22} = 10\ \Omega$, which is the output impedance only when port 1 is open. Adding the correction term instead of subtracting it, which gives $11.67\ \Omega$. Another mistake is killing the 5 V source by open-circuiting it; a voltage source is killed by shorting it, so the $5\ \Omega$ resistor stays connected across port 1.

Q.40 MCQ · 2 MARKS

Networks (Electric Circuits) › Laws & node/mesh

Q.40	In the circuit shown below, the value of the output voltage V_0 is _____ V. 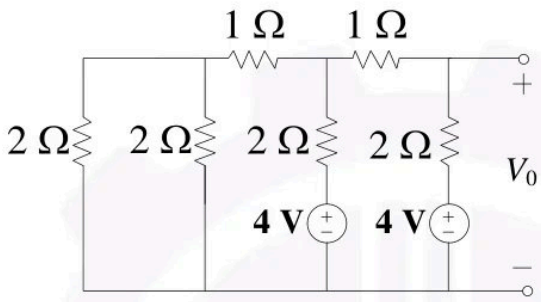
(A)	2
(B)	3
(C)	4
(D)	8

Official answer: **B**

SOLUTION

1. Take the bottom rail as reference. Name the top-rail nodes: A, the node that joins the tops of both left-hand 2 Ω resistors; B, the node where the first 4 V branch connects; and C, the output node, so $V_C = V_0$. Nothing is connected across the output terminals, so V_0 is simply the node voltage at C.
2. Combine the resistors at A in parallel. Both left-hand 2 Ω resistors run from A to the reference, so together they are $2 \parallel 2 = 1\ \Omega$.

3. Add the series resistor. With the 1 Ω from A to B added, the left part seen from node B is $1 + 1 = 2\ \Omega$ to the reference, and it contains no source.
4. Take the Thevenin equivalent at B. The branch at B is a 4 V source behind 2 Ω, in parallel with that passive 2 Ω. By Millman's theorem
$$V_{th} = \frac{\frac{4}{2} + \frac{0}{2}}{\frac{1}{2} + \frac{1}{2}} = 2\ \text{V}, \qquad R_{th} = 2 \parallel 2 = 1\ \Omega$$
5. Add the series resistor again. With the 1 Ω from B to C added, the left part seen from C becomes a 2 V source behind $1 + 1 = 2\ \Omega$.
6. Apply Millman's theorem at C. The 2 V / 2 Ω equivalent is in parallel with the 4 V / 2 Ω branch at C, so
$$V_0 = \frac{\frac{2}{2} + \frac{4}{2}}{\frac{1}{2} + \frac{1}{2}} = \frac{3}{1} = 3\ \text{V}$$
7. Check with KCL on the original circuit, using $V_0 = 3$ V. At C: $\frac{3 - V_B}{1} + \frac{3 - 4}{2} = 0$, so $V_B = 2.5$ V. At B: $\frac{2.5 - V_A}{1} + \frac{2.5 - 4}{2} + \frac{2.5 - 3}{1} = 0$, so $V_A = 1.25$ V. At A: $\frac{2.5 - 1.25}{1} = 1.25$ A flows in from B, and $\frac{1.25}{2} + \frac{1.25}{2} = 1.25$ A flows out through the two 2 Ω resistors, so every node balances. $V_0 = 3$ V, which is option (B).

KEY IDEA

Reduce the ladder step by step, starting at the passive left end and working toward the output. Parallel branches collapse by Millman's theorem (a single source transformation does the same job), and series resistors simply add. The output is open-circuited, so V_0 is the node voltage at C. The passive left section draws current from the sources, which pulls the output below 4 V.

WATCH OUT FOR

Seeing two equal 4 V sources and deciding that no current flows, which gives $V_0 = 4$ V (option C). The two left-hand 2 Ω resistors are a load of $1\ \Omega$ at A, and that load draws current through the 1 Ω resistors, so the output settles at 3 V. A second trap is adding the two sources to get 8 V (option D), but they are in parallel branches, not in series. Misreading the two left-hand 2 Ω resistors as being in series gives about 3.48 V, which matches none of the options. Their tops are joined by a plain wire, so they are in parallel.

Q.41 MCQ · 2 MARKS

Signals and Systems › Signals basics

Q.41 A signal $x(t)$ is shown below.

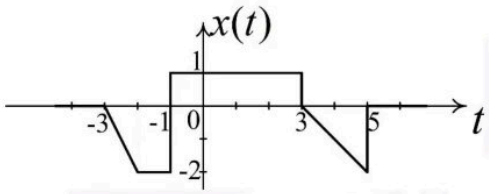

The plot of $y(t) = 1 - x(4-t)$ is shown in _____.

(A)

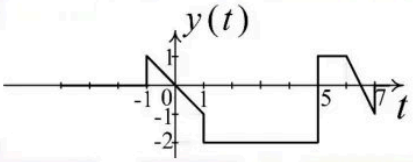

(B)

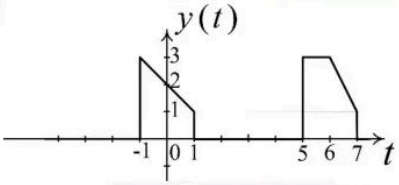

(C)

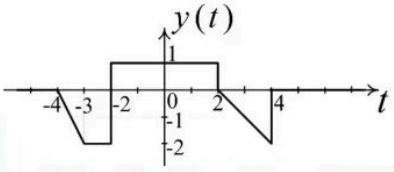

(D)

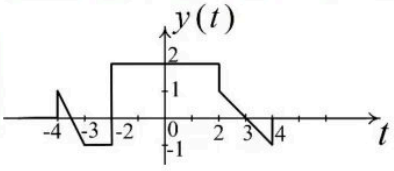

Official answer: **B**

SOLUTION

1. Read $x(t)$ from the figure piece by piece: $x(t) = 0$ for $t < -3$; a ramp from 0 at $t = -3$ down to -2 at $t = -2$; $x(t) = -2$ on $(-2, -1)$; $x(t) = 1$ on $(-1, 3)$; a ramp from 0 at $t = 3$ down to -2 at $t = 5$; $x(t) = 0$ for $t > 5$.
2. **Time operation first.** $x(4 - t) = x\left(-(t - 4)\right)$, which is $x(-t)$ delayed by 4. Equivalently, it is $x(t)$ reflected about $t = 2$. The quickest method is to map each point directly: the value $x(\tau)$ appears at $t = 4 - \tau$. So the breakpoints $\tau = -3, -2, -1, 3, 5$ move to $t = 7, 6, 5, 1, -1$, in reverse order.

3. Segment by segment, $x(4-t)$ is: a ramp from -2 at $t=-1$ up to 0 at $t=1$ (the image of the ramp on $(3,5)$); 1 on $(1,5)$; -2 on $(5,6)$; a ramp from -2 at $t=6$ up to 0 at $t=7$ (the image of the ramp on $(-3,-2)$); and 0 everywhere else.
4. **Amplitude operations:** negate, then add 1. So $y(t)=1-x(4-t)$ falls linearly from 3 to 1 on $(-1,1)$, is $1-1=0$ on $(1,5)$, is $1-(-2)=3$ on $(5,6)$, and falls linearly from 3 to 1 on $(6,7)$.
5. Check two points. First, $y(0)=1-x(4)$. $x(4)$ is halfway down the ramp from 0 to -2, so $x(4)=-1$ and $y(0)=2$, which matches the label 2 at $t=0$ in (B). Second, $y(5.5)=1-x(-1.5)=1-(-2)=3$, which matches the level-3 plateau of (B) on $(5,6)$.
6. **Eliminate the other options.** (C) is $x(t+1)$, a shift with no reversal: its breakpoints are at $-4,-3,-2,2,4$. (D) is $1+x(t+1)$ on $(-4,4)$. (A) is $-1-x(4-t)$ on $(-1,7)$. It has the right shape but the constant has the wrong sign, so it sits at -2 instead of 0 on $(1,5)$. Only (B) agrees with $1-x(4-t)$ on every segment where the signal varies.
7. **Caveat on the options:** strictly, for $t<-1$ and $t>7$ we have $x(4-t)=0$, so $y(t)=1$ there. Every option draws 0 on those intervals, so no option is exact everywhere. (B) is the only option that matches $y(t)$ on $-1<t<7$, where the signal actually varies, so (B) is the intended answer.

KEY IDEA

Do the time operation on the argument first and the amplitude operations last. For $x(4-t)$, the value $x(\tau)$ lands at $t=4-\tau$, which reflects $x(t)$ about $t=2$ and reverses the order of the breakpoints. Then negate and add 1. One point check, such as $y(0)=1-x(4)=2$, separates the options quickly.

WATCH OUT FOR

Shifting in the wrong direction is the usual error. Writing $x(4-t)$ as $x(-t)$ advanced by 4, i.e. $x(-(t+4))$, puts the breakpoints near $t=-7\ldots-1$ instead of $-1\ldots7$. Other slips: shifting without reversing, which gives (C), $x(t+1)$. Letting the minus sign act on the constant as well, which gives (A), $-1-x(4-t)$. Adding 1 without negating first.

Q.42 MCQ · 2 MARKS

Signals and Systems › LTI & convolution

In the table shown below, List-I are the system responses to input $x(t)$ and List-II are the system properties. The correct matching is ____.

LIST-I	LIST-II
(M) $x^2(t)$	(I) Linear and Time-invariant
(N) $x(-t)$	(II) Non-linear and Time-varying
(O) $\lvert x(3-t)\rvert$	(III) Linear and Time-varying
(P) $x(t-3)$	(IV) Non-linear and Time-invariant

(A) M-IV, N-III, O-II, P-I

(B) M-II, N-I, O-IV, P-III

(C) M-III, N-IV, O-II, P-I

(D) M-I, N-IV, O-III, P-II

Official answer: **A**

SOLUTION

1. **Tests used.** Linearity: $x_1\to y_1$ and $x_2\to y_2$ must imply $ax_1+bx_2\to ay_1+by_2$ for all constants a,b. Time invariance: feed in the delayed input $x(t-t_0)$ and compare the output with the delayed output $y(t-t_0)$. The two properties are tested separately. What the system does to the amplitude decides linearity, and what it does to the time argument decides time invariance.

2. **(M)** $y(t) = x^2(t)$**.** Scaling fails: $ax(t) \to a^2x^2(t) \neq a\,x^2(t)$ for $a \neq 0, 1$ and any x that is not identically zero, so the system is non-linear. The delayed input gives $x^2(t - t_0) = y(t - t_0)$, so it is time-invariant. This is **(IV)**.
3. **(N)** $y(t) = x(-t)$**.** Superposition holds: the input $ax_1 + bx_2$ gives $ax_1(-t) + bx_2(-t) = ay_1(t) + by_2(t)$, so the system is linear. With the delayed input $x_1(t) = x(t - t_0)$ the output is $y_1(t) = x_1(-t) = x(-t - t_0)$, while $y(t - t_0) = x(-(t - t_0)) = x(-t + t_0)$. The input is shifted one way and the output the other, so for $t_0 \neq 0$ they differ in general. The system is time-varying. This is **(III)**.
4. **(O)** $y(t) = |x(3 - t)|$**.** Take $a = -1$: the input $-x$ gives $|-x(3 - t)| = |x(3 - t)|$. That is not $-y(t)$ unless $x(3 - t) = 0$, so the system is non-linear. With the delayed input $x_1(t) = x(t - t_0)$ the output is $|x_1(3 - t)| = |x(3 - t - t_0)|$, while $y(t - t_0) = |x(3 - t + t_0)|$. As in (N), the time reversal inside the argument turns a delay of the input into an advance of the output, so these differ for $t_0 \neq 0$. The system is time-varying. This is **(II)**.
5. **(P)** $y(t) = x(t - 3)$**.** A pure delay obeys superposition, $ax_1(t - 3) + bx_2(t - 3) = ay_1(t) + by_2(t)$, so the system is linear. The delayed input gives $x(t - t_0 - 3)$, which equals $y(t - t_0)$, so it is time-invariant. This is **(I)**.
6. **Matching:** M-IV, N-III, O-II, P-I, which is option **(A)**.

KEY IDEA

Test the amplitude and the time argument separately. A non-linear operation on the amplitude, such as squaring or taking the modulus, makes a system non-linear. Anything done to the time argument other than a pure shift, such as the reversal $t \to -t$, makes it time-varying. $x(t - 3)$ is only a shift, so it is LTI. $x(-t)$ and $|x(3 - t)|$ both reverse time, so both are time-varying. $x^2(t)$ and $|\cdot|$ fail scaling, so both are non-linear.

WATCH OUT FOR

Getting the time-invariance test wrong for $x(-t)$ by substituting $t \to t - t_0$ everywhere in $y(t)$. That only produces $y(t - t_0)$ and compares it with itself. The response to the delayed input must be found by delaying x first, which gives $x(-t - t_0)$. A second mistake is to read $x(3 - t)$ as a shift by 3 and so call (O) time-invariant, when $x(3 - t) = x(-(t - 3))$ contains a reversal. A third is to treat the modulus as linear because it keeps the shape of a positive signal.

Q.43 MCQ · 2 MARKS

Signals and Systems › Laplace

Given two signals: $x(t) = u(t - 2) - u(t - 3)$, and $y(t) = e^{-4t}u(t)$.

If $z(t) = x(t) * y(t)$, then $Z(s)$ is _____.

(A) $\dfrac{e^{-3s}\left[e^{s} - 1\right]}{s(s + 4)}$

(B) $\dfrac{e^{-s}\left[e^{-3s} - 1\right]}{(s + 3)(s + 4)}$

(C) $\dfrac{e^{-3s}\left[1 - e^{s}\right]}{(s + 3)(s + 4)}$

(D) $\dfrac{e^{-3s}\left[1 - e^{s}\right]}{s(s + 4)}$

Official answer: **A**

SOLUTION

1. **Convolution property:** convolution in time becomes multiplication in s, so $Z(s) = X(s)\,Y(s)$.
2. **Time-shift property** with $\mathcal{L}\{u(t)\} = \dfrac{1}{s}$: $\mathcal{L}\{u(t - t_0)\} = \dfrac{e^{-st_0}}{s}$, so
$$X(s) = \frac{e^{-2s}}{s} - \frac{e^{-3s}}{s} = \frac{e^{-2s} - e^{-3s}}{s}.$$
3. **Standard pair:** $\mathcal{L}\{e^{-4t}u(t)\} = \dfrac{1}{s + 4}$, so $Y(s) = \dfrac{1}{s + 4}$.

4. Multiply:
$$Z(s) = \frac{e^{-2s} - e^{-3s}}{s(s+4)}.$$
5. Take out e^{-3s} as a common factor: $e^{-2s} - e^{-3s} = e^{-3s}\left(e^{s} - 1\right)$, so
$$Z(s) = \frac{e^{-3s}\left[e^{s} - 1\right]}{s(s+4)}.$$
6. **Checking the other options:** the denominator must be $s(s+4)$, because the rectangular pulse brings the factor $\frac{1}{s}$. That rules out (B) and (C). (D) is exactly $-Z(s)$, since $1 - e^{s} = -\left(e^{s} - 1\right)$. The answer is (A).

KEY IDEA

Convolution in time becomes multiplication in s. The pulse $u(t-2) - u(t-3)$ transforms to $\frac{e^{-2s} - e^{-3s}}{s}$ by the time-shift property, and $e^{-4t}u(t)$ transforms to $\frac{1}{s+4}$. Taking out e^{-3s} as a common factor puts the product in the printed form. Quick check: $x(t) \geq 0$ and $y(t) \geq 0$, so $z(t) \geq 0$ and its area $Z(0)$ must be positive. The pulse has area 1 and y has area $\frac{1}{4}$, so $Z(0) = \frac{1}{4}$. Option (A) tends to $+\frac{1}{4}$ as $s \to 0$ and (D) tends to $-\frac{1}{4}$.

WATCH OUT FOR

Getting the sign wrong when taking out the common factor. $e^{-2s} - e^{-3s}$ equals $e^{-3s}\left(e^{s} - 1\right)$, not $e^{-3s}\left(1 - e^{s}\right)$, and the wrong sign leads to (D). A second mistake is to shift the $\frac{1}{s+4}$ factor and get something like $(s+3)$ in the denominator, as in (B) and (C). Only the step functions pick up e^{-st_0}. The exponential is not shifted, so its transform stays $\frac{1}{s+4}$.

Q.44 MCQ · 2 MARKS

Control Systems › State space

A linear time invariant (LTI) system is described by:
$$\begin{bmatrix}\dot{x}_1 \\ \dot{x}_2\end{bmatrix} = \begin{bmatrix}0 & 1 \\ -10 & -7\end{bmatrix}\begin{bmatrix}x_1 \\ x_2\end{bmatrix} + \begin{bmatrix}1 \\ 1\end{bmatrix} u$$
$$y = \begin{bmatrix}1 & 1\end{bmatrix}\begin{bmatrix}x_1 \\ x_2\end{bmatrix}$$

The poles of the system are ____.

(A) $-2, -5$

(B) $2, 5$

(C) $-2, 5$

(D) $2, -5$

Official answer: **A**

SOLUTION

1. The poles are the roots of the characteristic equation $|sI - A| = 0$, which are the eigenvalues of A. This holds as long as no pole cancels against a zero in $G(s) = C(sI - A)^{-1}B$, and step 5 checks that.
2. $$sI - A = \begin{bmatrix}s & -1 \\ 10 & s+7\end{bmatrix}$$
3. $$|sI - A| = s(s+7) + 10 = s^2 + 7s + 10 = (s+2)(s+5)$$
4. The eigenvalues of A are $s = -2$ and $s = -5$. Check: trace $A = -7 = (-2) + (-5)$ and $\det A = 10 = (-2)(-5)$.
5. Check for cancellation using $G(s) = C(sI - A)^{-1}B$:
$$(sI - A)^{-1}B = \frac{1}{(s+2)(s+5)}\begin{bmatrix}s+7 & 1 \\ -10 & s\end{bmatrix}\begin{bmatrix}1 \\ 1\end{bmatrix} = \frac{1}{(s+2)(s+5)}\begin{bmatrix}s+8 \\ s-10\end{bmatrix}$$

6. $$G(s) = \begin{bmatrix} 1 & 1 \end{bmatrix} \frac{1}{(s+2)(s+5)} \begin{bmatrix} s+8 \\ s-10 \end{bmatrix} = \frac{2(s-1)}{(s+2)(s+5)}$$

The only zero is at $s = 1$, so it cancels neither pole.

7. So the poles are -2 and -5: option (A).

KEY IDEA

For a state-space model the poles are the roots of $|sI - A| = 0$, the eigenvalues of A. Check them quickly with trace A = sum of the eigenvalues and $\det A$ = their product. A pole drops out of the transfer function only if a zero of $C\,\mathrm{adj}(sI - A)\,B$ cancels it. Here the only zero is at $s = 1$, so both eigenvalues are poles.

WATCH OUT FOR

Getting the sign of the -10 entry wrong when forming $sI - A$. Writing $s(s+7) - 10$ gives $s^2 + 7s - 10$, whose roots are not integers and match no option. Another mistake is to take the roots of $s^2 - 7s + 10$ (that is, $\det(A - sI)$ with the signs slipped) and pick $2, 5$, option (B). Two eigenvalues whose sum is the negative trace -7 and whose product is $+10$ must both be negative.

Q.45 MCQ · 2 MARKS

Q.45	In the circuit shown below, R is 1 kΩ and R_f is 10 kΩ. If V_{in} is 100 mV and the op-amps have supply voltages of ±15 V, then V_{out} is _____ V. 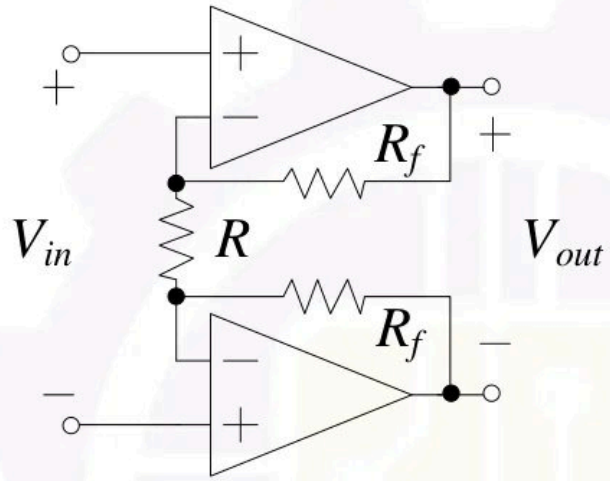
(A)	−15
(B)	15
(C)	2.1
(D)	1.1

Official answer: **C**

SOLUTION

1. Assumptions: both op-amps are ideal (infinite open-loop gain, zero input current). Each has negative feedback through its own R_f to its inverting input, so each works in its linear region with a virtual short between its inputs. Call the input terminal voltages V_1 (top, +) and V_2 (bottom, –), so $V_{in} = V_1 - V_2$. Call the outputs V_{o1} (top) and V_{o2} (bottom), so $V_{out} = V_{o1} - V_{o2}$.
2. Virtual short at each op-amp: the top end of R is at V_1 and the bottom end of R is at V_2. So the whole input difference appears across R.
3. Ohm's law on R:

$$I = \frac{V_1 - V_2}{R} = \frac{V_{in}}{R}$$

flowing downward through R.

4. No current enters either op-amp input, so the same current I flows through both R_f resistors. It comes out of the top output through the upper R_f, passes down through R, and flows through the lower R_f into the bottom output.
5. Add up the voltage drops from the top output to the bottom output through R_f, R and R_f in series:
$$V_{out} = V_{o1} - V_{o2} = I\,(R_f + R + R_f) = V_{in}\left(1 + \frac{2R_f}{R}\right)$$
6. Differential gain: $1 + \dfrac{2(10\ \text{k}\Omega)}{1\ \text{k}\Omega} = 21$, so $V_{out} = 21 \times 100\ \text{mV} = 2.1\ \text{V}$.
7. Saturation check: $I = 100\ \text{mV}/1\ \text{k}\Omega = 0.1\ \text{mA}$, so $IR_f = 1\ \text{V}$. This gives $V_{o1} = V_1 + 1\ \text{V}$ and $V_{o2} = V_2 - 1\ \text{V}$. Each output sits only about $1\ \text{V}$ away from its own input terminal. The question gives no input common-mode level, so take the usual reading that it is well inside the rails. Then both outputs stay far from $\pm 15\ \text{V}$, both op-amps stay linear, and $V_{out} = 2.1\ \text{V}$, option (C). Options (A) and (B) would need an op-amp to saturate, and that does not happen here.

KEY IDEA

This is the input stage of the three-op-amp instrumentation amplifier. The two virtual shorts force the full input difference across R. Since no current enters either op-amp input, the same current V_{in}/R flows through the string R_f–R–R_f between the two outputs. That makes the differential gain $1 + 2R_f/R$.

WATCH OUT FOR

Using the single non-inverting gain $1 + R_f/R = 11$ gives $1.1\ \text{V}$, option (D). That forgets the second R_f, which carries the same current. Another mistake is to see the $\pm 15\ \text{V}$ supply and assume the output saturates, which leads to (A) or (B). In fact each output moves only about $1\ \text{V}$ from its input, so both op-amps stay linear.

Q.46 MCQ · 2 MARKS

Analog Electronics › Filters & waveforms

Q.46	In the following active filter circuit with ideal op-amps, R is 1 kΩ, C is 1 μF, and V_{in} has an amplitude of 1 V at 1000 rad/s. The amplitude of V_{out} is _____ V. 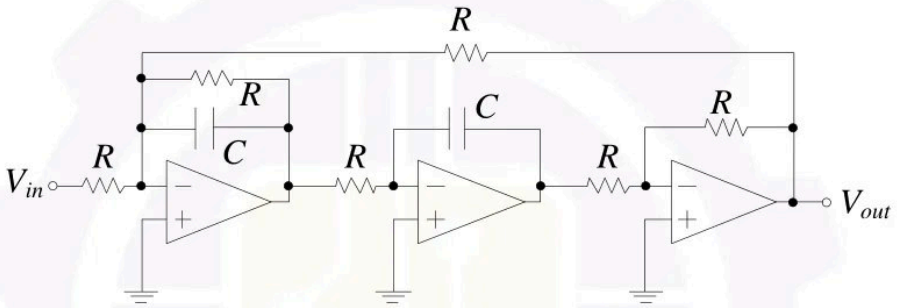
(A)	0.5
(B)	0.707
(C)	1.0
(D)	1.414

Official answer: **C**

SOLUTION

1. Assumptions: the op-amps are ideal. Every non-inverting input is grounded, so each inverting input is a virtual ground, and no current flows into either input. Call the output of op-amp 1 V_1 and the output of op-amp 2 V_2. Work in the Laplace domain with $s = j\omega$.
2. Stage 3 is an inverting amplifier with gain $-R/R = -1$, so $V_{out} = -V_2$.

3. Stage 2 is an inverting integrator with input resistor R and feedback capacitor C, so $V_2 = -\dfrac{V_1}{sRC}$. Combining stages 2 and 3 gives $V_{out} = \dfrac{V_1}{sRC}$, that is, $V_1 = sRC\,V_{out}$.
4. Stage 1 is a lossy summing integrator. Its inverting input receives current from V_{in} through R and from V_{out} through the top resistor R, and its feedback path is R in parallel with C. KCL at the virtual ground:
$$\frac{V_{in}}{R} + \frac{V_{out}}{R} + V_1\left(\frac{1}{R} + sC\right) = 0 \;\Rightarrow\; V_1(1 + sRC) = -(V_{in} + V_{out})$$
5. Substitute $V_1 = sRC\,V_{out}$:
$$sRC(1 + sRC)\,V_{out} = -V_{in} - V_{out} \;\Rightarrow\; H(s) = \frac{V_{out}}{V_{in}} = \frac{-1}{(sRC)^2 + sRC + 1}$$
This is the second-order low-pass response of a three-op-amp (Tow-Thomas) biquad. Its DC gain is -1. Written as $\dfrac{-\omega_0^2}{s^2 + (\omega_0/Q)s + \omega_0^2}$, it has $\omega_0 = \dfrac{1}{RC}$ and $\dfrac{\omega_0}{Q} = \dfrac{1}{RC}$, so $Q = 1$.
6. Numbers: $RC = (10^3\ \Omega)(10^{-6}\ \mathrm{F}) = 10^{-3}$ s, so $\omega_0 = 1000\ \mathrm{rad/s}$. The input is at exactly ω_0, so $sRC = j\omega RC = j(1000)(10^{-3}) = j$.
7. Then
$$H(j\omega_0) = \frac{-1}{j^2 + j + 1} = \frac{-1}{-1 + j + 1} = \frac{-1}{j} = j$$
so $|H(j\omega_0)| = 1$. This agrees with the general result for a low-pass biquad at ω_0: $|H(j\omega_0)| = |\mathrm{DC\ gain}| \times Q = 1 \times 1$.
8. The output amplitude is $|V_{out}| = |H(j\omega_0)| \times 1\ \mathrm{V} = 1.0\ \mathrm{V}$. It leads the input by 90°, but only the amplitude is asked for. The answer is option (C).

KEY IDEA

Treat the three op-amps as one feedback loop, not as a cascade. Write each stage with the virtual-ground rule (inverter: -1; integrator: $-1/sRC$; lossy summing integrator: KCL with $R \parallel C$ feedback). Then close the loop through the top resistor. The result is a second-order low-pass biquad, and at $\omega = \omega_0$ its gain magnitude is $|\mathrm{DC\ gain}| \times Q$.

WATCH OUT FOR

The usual mistake is to ignore the global feedback resistor from V_{out} back to op-amp 1 and multiply the three stage gains as if they were a simple cascade. At $sRC = j$ that gives $\left|\dfrac{-1}{1+j}\right| \times 1 \times 1 = 0.707$, which is option (B). The loop through the top R changes the denominator to $(sRC)^2 + sRC + 1$, and that raises the gain at ω_0 to $Q = 1$. A second slip is getting the sign around the loop wrong: the integrator and the inverter together give $V_{out} = +V_1/(sRC)$, not $-V_1/(sRC)$.

Q.47 MCQ · 2 MARKS

Digital Electronics › Sequential

Q.47 The initial state of $Q_3Q_2Q_1Q_0$ in the digital circuit shown below is 1011.

The new value of $Q_3Q_2Q_1Q_0$ after two rising edges of the clock (CLK) will be _____.

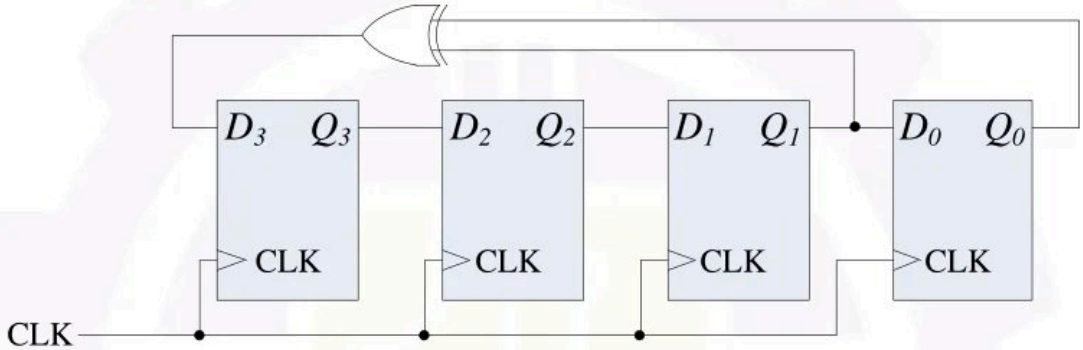

(A)	1101
(B)	0101
(C)	1010
(D)	1011

Official answer: **C**

SOLUTION

1. Read the next-state equations off the circuit. For a D flip-flop, $Q^+ = D$, so:
$$D_3 = Q_1 \oplus Q_0, \quad D_2 = Q_3, \quad D_1 = Q_2, \quad D_0 = Q_1$$
The circuit is a right-shift register. Its serial input D_3 is the XOR of Q_1 (taken from the junction dot on the $Q_1 \to D_0$ wire) and Q_0 (the feedback wire that runs back over the top).
2. All four flip-flops share one clock, so the circuit is synchronous. On each rising edge, every D is computed from the state held **before** that edge, and all four outputs change together.
3. First rising edge, starting from $Q_3Q_2Q_1Q_0 = 1011$ (so $Q_3 = 1,\ Q_2 = 0,\ Q_1 = 1,\ Q_0 = 1$): $D_3 = 1 \oplus 1 = 0$, $D_2 = Q_3 = 1$, $D_1 = Q_2 = 0$, $D_0 = Q_1 = 1$. New state: 0101.

4. Second rising edge, starting from 0101 (so $Q_3 = 0,\ Q_2 = 1,\ Q_1 = 0,\ Q_0 = 1$): $D_3 = 0 \oplus 1 = 1$, $D_2 = Q_3 = 0$, $D_1 = Q_2 = 1$, $D_0 = Q_1 = 0$. New state: 1010.
5. After two rising edges, $Q_3Q_2Q_1Q_0 = 1010$. This is option (C).

KEY IDEA

In a synchronous circuit, write $Q^+ = D$ for every flip-flop. Then work out every D from the present state, update all flip-flops together on each clock edge, and repeat once per edge. Here the circuit is a right-shift register with XOR feedback: $D_3 = Q_1 \oplus Q_0$, $D_2 = Q_3$, $D_1 = Q_2$, $D_0 = Q_1$.

WATCH OUT FOR

The most common slip is stopping after one clock edge. That gives 0101, which is option (B). A second mistake is updating the flip-flops one at a time, so that an already-changed Q feeds the next D within the same edge. A third is reading the XOR gate as an XNOR: the first edge then gives 1101, which is option (A). A fourth is shifting in the wrong direction. Each wire goes from Q_k to D_{k-1}, so the bits move from Q_3 towards Q_0.

Q.48 MCQ · 2 MARKS

Electrical and Electronic Measurements › Time, frequency & scopes

A closed Lissajous pattern observed on an oscilloscope in the $\mathbf{X} - \mathbf{Y}$ mode has three horizontal tangencies and two vertical tangencies in steady state. If the signal-frequency on channel-$\mathbf{X}$ is 600 Hz, then the signal-frequency on channel-$\mathbf{Y}$ is _____ Hz.

(A) 300
(B) 400
(C) 600
(D) 900

Official answer: **D**

SOLUTION

1. In X-Y mode the spot is driven by $x = A\sin(\omega_x t)$ and $y = B\sin(\omega_y t + \phi)$. Over one repeat period T of the closed figure, the spot touches the top edge (a horizontal tangent line) once for every cycle of the Y signal. It touches the right edge (a vertical tangent line) once for every cycle of the X signal.
2. So the number of horizontal tangencies is $f_y T$ and the number of vertical tangencies is $f_x T$. Dividing one by the other gives the Lissajous rule
$$\frac{f_y}{f_x} = \frac{\text{number of horizontal tangencies}}{\text{number of vertical tangencies}}$$
3. Tangencies are counted along one edge only. In a closed pattern the top and bottom edges always have the same count, and so do the left and right edges. So the 3 in the question is the count on one horizontal edge, and the 2 is the count on one vertical edge. (A total of 3 split across the top and bottom edges is impossible for a closed figure, because the two edges must carry equal counts.)
4. Substitute the given counts:
$$\frac{f_y}{600\ \text{Hz}} = \frac{3}{2}$$
5. $$f_y = \frac{3}{2} \times 600\ \text{Hz} = 900\ \text{Hz}$$
6. Check: $f_y : f_x = 900 : 600 = 3 : 2$. The Y signal completes 3 cycles while X completes 2, so the figure touches the top edge 3 times and a side edge 2 times. That matches the question, so the answer is (D).

KEY IDEA

For a stationary closed Lissajous figure, f_y/f_x equals the number of tangencies on a horizontal edge divided by the number on a vertical edge. The spot reaches its highest point once per Y cycle and its rightmost point once per X cycle.

WATCH OUT FOR

Inverting the ratio, i.e. taking $f_y/f_x = 2/3$, gives $400\ \text{Hz}$, option (B). Horizontal tangencies are set by the vertical (Y) deflection, because the spot touches the top edge once per Y cycle, so they go in the numerator with f_y. Another slip is to add the top and bottom tangencies together, when the count should be taken along one edge only.

Q.49 MCQ · 2 MARKS

Electrical and Electronic Measurements › Errors & standards

If the definition of SI unit 'X' is required to define SI unit 'Y', the dependency is indicated as X → Y. A valid order of dependencies, as per present convention, is _____.

(A) metre → second → kilogram → kelvin

(B) second → metre → kilogram → kelvin

(C) metre → second → kelvin → kilogram

(D) second → kilogram → kelvin → metre

Official answer: **B**

SOLUTION

1. In the present SI (revised in 2019), each base unit is defined by fixing the numerical value of a defining constant. A unit depends on every other base unit that appears in the SI unit of its constant. So an arrow $X \to Y$ is valid only if unit X appears in the unit of the constant that defines Y.
2. **Second:** fixed by the caesium-133 hyperfine transition frequency, $\Delta\nu_{\text{Cs}} = 9\,192\,631\,770\ \text{Hz}$, where $\text{Hz} = \text{s}^{-1}$. No other base unit is needed, so the second comes first.
3. **Metre:** fixed by the speed of light in vacuum, $c = 299\,792\,458\ \text{m s}^{-1}$. The second is needed, so $\text{second} \to \text{metre}$.
4. **Kilogram:** fixed by the Planck constant, $h = 6.626\,070\,15 \times 10^{-34}\ \text{J s}$, where $\text{J s} = \text{kg m}^2\,\text{s}^{-1}$. Both the metre and the second are needed, so $\text{metre} \to \text{kilogram}$.
5. **Kelvin:** fixed by the Boltzmann constant, $k = 1.380\,649 \times 10^{-23}\ \text{J K}^{-1}$, where $\text{J K}^{-1} = \text{kg m}^2\,\text{s}^{-2}\,\text{K}^{-1}$. It needs the kilogram, the metre and the second, so $\text{kilogram} \to \text{kelvin}$.
6. Every arrow in the chain is therefore a genuine dependency:
$$\text{second} \to \text{metre} \to \text{kilogram} \to \text{kelvin}$$
7. Checking the other options arrow by arrow: (A) and (C) both begin with $\text{metre} \to \text{second}$, but the second is defined by $\Delta\nu_{\text{Cs}}$ alone and does not need the metre (it is the other way round). (C) also has $\text{kelvin} \to \text{kilogram}$, but h contains no kelvin, so the kilogram does not need the kelvin. (D) ends with $\text{kelvin} \to \text{metre}$, but c contains no kelvin, so the metre does not need it; in fact the kelvin needs the metre. The answer is (B).

KEY IDEA

In the 2019 SI each base unit is defined by fixing an exact value of a constant: $\Delta\nu_{\mathrm{Cs}}$ (second), c (metre), h (kilogram) and k (kelvin). To see what a unit depends on, write the constant's unit in base units: $\mathrm{Hz} = \mathrm{s}^{-1}$, $\mathrm{m\,s}^{-1}$, $\mathrm{J\,s} = \mathrm{kg\,m}^2\,\mathrm{s}^{-1}$, $\mathrm{J\,K}^{-1} = \mathrm{kg\,m}^2\,\mathrm{s}^{-2}\,\mathrm{K}^{-1}$. The dependencies line up as second → metre → kilogram → kelvin.

WATCH OUT FOR

Going by the old definitions or the usual listing order (metre, kilogram, second, ...) and putting the metre before the second. Since 1983 the metre has been defined through the second, and the kilogram is no longer a platinum-iridium artefact: since 2019 it is defined through h, which brings in the metre and the second. A second trap is thinking the kelvin is independent (the old triple-point-of-water definition). Because k is in $\mathrm{J\,K}^{-1}$, the kelvin now depends on the kilogram, metre and second.

Q.50 MCQ · 2 MARKS

Sensors and Industrial Instrumentation › Sensing principles

A parallel plate capacitive displacement sensor has a plate area of 2 cm^2. The air gap between the plates is decreased by 0.1 mm from an initial value of 0.5 mm. The percentage change in the capacitance value is _____ %. (Assume permittivity as $\epsilon_0 = 8.854 \times 10^{-12}$ F/m)

(A) 10.0

(B) 14.1

(C) 25.0

(D) 30.0

Official answer: **C**

SOLUTION

1. For a parallel plate capacitor with air between the plates, $C = \dfrac{\epsilon_0 A}{d}$. With the plate area fixed, $C \propto \dfrac{1}{d}$.
2. The initial gap is $d_1 = 0.5\ \mathrm{mm}$. The gap is decreased by $0.1\ \mathrm{mm}$, so $d_2 = 0.5 - 0.1 = 0.4\ \mathrm{mm}$.
3. Initial capacitance: $C_1 = \dfrac{8.854 \times 10^{-12} \times 2 \times 10^{-4}}{0.5 \times 10^{-3}} \approx 3.54\ \mathrm{pF}$, using $A = 2\ \mathrm{cm}^2 = 2 \times 10^{-4}\ \mathrm{m}^2$.
4. Final capacitance: $C_2 = \dfrac{8.854 \times 10^{-12} \times 2 \times 10^{-4}}{0.4 \times 10^{-3}} \approx 4.43\ \mathrm{pF}$.
5. The ratio does not depend on ϵ_0 or A: $\dfrac{C_2}{C_1} = \dfrac{d_1}{d_2} = \dfrac{0.5}{0.4} = 1.25$.
6. Percentage change: $\dfrac{C_2 - C_1}{C_1} \times 100 = (1.25 - 1) \times 100 = 25\%$, an increase. This is option (C).

KEY IDEA

For a parallel plate sensor with fixed area and dielectric, $C \propto 1/d$. The percentage change is $\left(\dfrac{d_1}{d_2} - 1\right) \times 100$. The values of ϵ_0 and A cancel.

WATCH OUT FOR

Taking the percentage change in the gap, $0.1/0.5 = 20\%$, as the percentage change in capacitance. Capacitance is inversely proportional to the gap, so a 20% smaller gap gives a 25% larger capacitance. Another slip is dividing by the new capacitance instead of the initial one, which gives 20%.

Q.51 MCQ · 2 MARKS

Sensors and Industrial Instrumentation › Temperature

The emitted radiant energy from a piece of metal was measured using a pyrometer. The temperature was calculated to be 1000 °C, assuming a surface emissivity of 0.8. It was later found that the true surface emissivity was 0.7. The actual temperature of the object is nearest to _____ °C.

(A) 1043

(B) 958

(C) 1033

(D) 967

Official answer: **A**

SOLUTION

1. The pyrometer responds to the radiant energy emitted by the surface, which is fixed by the measurement. For a real surface, the total emissive power is $E = \varepsilon\sigma T^4$, with T in kelvin.
2. The same E was used for both the assumed and the true emissivity, so $\varepsilon_1 T_1^4 = \varepsilon_2 T_2^4$, with $\varepsilon_1 = 0.8$ and $\varepsilon_2 = 0.7$.
3. Convert the calculated temperature to kelvin: $T_1 = 1000 + 273.15 = 1273.15\ \text{K}$.
4. Solve for the true temperature: $T_2 = T_1 \left(\dfrac{\varepsilon_1}{\varepsilon_2}\right)^{1/4} = 1273.15 \left(\dfrac{0.8}{0.7}\right)^{1/4}$.
5. Evaluate the ratio: $\ln(1.142857) \approx 0.13353$, so $(1.142857)^{1/4} = e^{0.03338} \approx 1.0339$.
6. $T_2 \approx 1273.15 \times 1.0339 \approx 1316.4\ \text{K}$.
7. Convert back to Celsius: $T_2 \approx 1316.4 - 273.15 \approx 1043\ ^\circ\text{C}$, which is option (A). It is higher than 1000 °C because the true emissivity is lower, so the surface must be hotter to emit the same energy.

KEY IDEA

A pyrometer measures emitted radiant energy, so εT^4 stays constant. Correcting the emissivity changes the temperature by $T_2 = T_1(\varepsilon_1/\varepsilon_2)^{1/4}$, using absolute temperature.

WATCH OUT FOR

Applying the emissivity ratio to the Celsius temperature, or forgetting to convert to kelvin. Another is using the ratio the wrong way round, which gives about 958 °C, a lower temperature for a lower emissivity.

Q.52 MCQ · 2 MARKS

Communications › Analog modulation

An amplitude modulated voltage signal $x(t)$ drives a load of $1\ \Omega$. $x(t) = K\cos(300\pi t) + L\cos(240\pi t) + L\cos(360\pi t)$. If the efficiency is 60% and the carrier power is 50 W, the value of L is _____ V.

(A) 8.66

(B) 1.22

(C) 0.81

(D) 17.32

Official answer: **A**

SOLUTION

1. Read the spectrum: the term at 150 Hz (300π rad/s) is the carrier with amplitude K. The terms at 120 Hz and 180 Hz (240π and 360π rad/s) are the lower and upper sidebands, each of amplitude L, so $f_m = 30$ Hz.
2. Carrier power in the $1\ \Omega$ load: $P_c = \dfrac{K^2}{2R} = \dfrac{K^2}{2} = 50\ \text{W}$, so $K = 10\ \text{V}$.
3. Each sideband is a sinusoid of amplitude L, so it carries $\dfrac{L^2}{2}$ W. The total sideband power is $P_s = 2 \cdot \dfrac{L^2}{2} = L^2\ \text{W}$.
4. Efficiency is the fraction of total power carried by the sidebands: $\eta = \dfrac{P_s}{P_c + P_s} = \dfrac{L^2}{50 + L^2}$.
5. Set $\eta = 0.6$: $L^2 = 0.6\,(50 + L^2)$, so $0.4L^2 = 30$ and $L^2 = 75$.
6. $L = \sqrt{75} \approx 8.66\ \text{V}$, which is option (A).

7. Check: $L = \mu K/2$ gives $\mu = \dfrac{2L}{K} \approx 1.732$. Then $\eta = \dfrac{\mu^2}{2+\mu^2} = \dfrac{3}{5} = 0.6$, which is consistent.

KEY IDEA

In AM, efficiency is sideband power divided by total power. With a carrier of amplitude K and two sidebands of amplitude L each, $\eta = \dfrac{L^2}{K^2/2 + L^2}$ in a $1\ \Omega$ load.

WATCH OUT FOR

Counting only one sideband ($L^2/2$ instead of L^2) gives $L^2 = 37.5$ and $L \approx 6.12$ V, which is not an option. Another slip is using L^2 instead of $L^2/2$ for the power of a sinusoid.

Q.53 MSQ · 2 MARKS

Engineering Mathematics › Calculus

Given $f(x, y) = x^2 - 2xy + y^2$

The complete contour of the equation $f(x, y) = 1$ is described by the option(s) ___.

(A) A line, $x - y = 1$

(B) A circle with radius 1

(C) An ellipse with length of major axis equal to 1

(D) A line, $x - y = -1$

Official answer: **A, D**

SOLUTION

1. Spot the perfect square: $x^2 - 2xy + y^2 = (x - y)^2$. The contour $f(x, y) = 1$ is therefore $(x - y)^2 = 1$.
2. Take square roots and keep both signs: $x - y = \pm 1$. The contour is the pair of parallel lines $x - y = 1$ and $x - y = -1$.
3. Check with the conic discriminant. For the quadratic part $Ax^2 + Bxy + Cy^2$, here $A = 1,\ B = -2,\ C = 1$, so $B^2 - 4AC = 4 - 4 = 0$. That is the parabolic case, and here it is degenerate: the curve splits into two straight lines. A circle or an ellipse needs $B^2 - 4AC < 0$, so options (B) and (C) are ruled out.
4. Check one point on each line. $(1, 0)$ lies on $x - y = 1$ and gives $f = 1 - 0 + 0 = 1$. $(0, 1)$ lies on $x - y = -1$ and gives $f = 0 - 0 + 1 = 1$. Both lines belong to the contour.
5. The question asks for the complete contour. That contour is exactly the union of the two lines, so (A) and (D) together describe it, and both are correct.

KEY IDEA

$x^2 - 2xy + y^2$ is the perfect square $(x - y)^2$, so a level set $(x - y)^2 = k$ with $k > 0$ is two parallel lines $x - y = \pm\sqrt{k}$, not a closed curve. The discriminant $B^2 - 4AC = 0$ gives the same answer: it rules out circles and ellipses.

WATCH OUT FOR

Keeping only the positive root and marking (A) alone. The complete contour is both lines, because $(x - y)^2 = 1$ also holds when $x - y = -1$. Another trap is to see squared terms with equal coefficients and guess a circle. That ignores the $-2xy$ cross term, which turns the expression into a perfect square.

Q.54 MSQ · 2 MARKS

Engineering Mathematics › Differential equations

Given a differential equation $\dfrac{d^2x}{dt^2} + x = 0$ with $x(0) \neq 0$.

Which of the following statements is/are true?

(A) $|x(t)|^2 + \left|\dfrac{dx(t)}{dt}\right|^2 = 0$ for all $t \geq 0$

(B) $|x(t)|^2 + \left|\dfrac{dx(t)}{dt}\right|^2 = c$ for all $t \geq 0$, for some real constant $c > 0$

(C) $|x(t)|^2 + \left|\dfrac{dx(t)}{dt}\right|^2 = e^{jt}$ for all $t \geq 0$

(D) $|x(t)|^2 + \left|\dfrac{dx(t)}{dt}\right|^2 = \sin t$ for all $t \geq 0$

Official answer: **B**

SOLUTION

1. Solve the ODE. The auxiliary equation $m^2 + 1 = 0$ gives $m = \pm j$, so the general real solution is $x(t) = k_1 \cos t + k_2 \sin t$, with $k_1 = x(0) \neq 0$ and $k_2 = \dot{x}(0)$.
2. Differentiate: $\dfrac{dx}{dt} = -k_1 \sin t + k_2 \cos t$.
3. Add the squares:

$$\begin{aligned} x^2 + \left(\frac{dx}{dt}\right)^2 &= (k_1 \cos t + k_2 \sin t)^2 + (-k_1 \sin t + k_2 \cos t)^2 \\ &= k_1^2(\cos^2 t + \sin^2 t) + k_2^2(\sin^2 t + \cos^2 t) \\ &= k_1^2 + k_2^2. \end{aligned}$$

   The cross terms $+2k_1k_2 \sin t \cos t$ and $-2k_1k_2 \sin t \cos t$ cancel.
4. Quick check without solving (energy argument): $\dfrac{d}{dt}\left[x^2 + \dot{x}^2\right] = 2x\dot{x} + 2\dot{x}\ddot{x} = 2\dot{x}\,(x + \ddot{x}) = 0$, because $\ddot{x} + x = 0$. So the sum does not change with time. The modulus signs in the options change nothing: if x were allowed to be complex, $\dfrac{d}{dt}\left[|x|^2 + |\dot{x}|^2\right] = 2\,\mathrm{Re}\left[\bar{\dot{x}}\,(x + \ddot{x})\right] = 0$ as well.
5. So the sum is a constant, fixed by its value at $t = 0$: $c = |x(0)|^2 + |\dot{x}(0)|^2 \geq |x(0)|^2 > 0$ (for the real solution, $c = k_1^2 + k_2^2$). The constant is real and strictly positive, so (B) is true.
6. (A) is false: the sum equals $c \geq |x(0)|^2 > 0$ at every t, so it is never 0. It could only be 0 for the trivial solution $x \equiv 0$, which $x(0) \neq 0$ rules out.
7. (C) is false: the left side is a real constant, but $e^{jt} = \cos t + j \sin t$ changes with t and is not even real in general (at $t = \pi/2$ it equals j).
8. (D) is false: $\sin t$ changes with t, and at $t = 0$ it gives 0, but the left side is $c > 0$. Only (B) is true.

KEY IDEA

$\ddot{x} + x = 0$ is simple harmonic motion, and $x^2 + \dot{x}^2$ is its conserved energy. Multiply the equation by $\dot{x}$ and you get $\dfrac{d}{dt}\left[\frac{1}{2}(x^2 + \dot{x}^2)\right] = 0$. In the phase plane the trajectory is a circle of radius $\sqrt{c}$, and $x(0) \neq 0$ means that radius cannot be zero.

WATCH OUT FOR

Picking (C) because the characteristic roots are $\pm j$ and the solutions contain $e^{\pm jt}$. That mixes up the form of $x(t)$ with the value of $|x|^2 + |\dot{x}|^2$, which is a real constant. Another slip is choosing (A) because the equation is homogeneous and has no forcing. The sum is zero only for the trivial solution, and $x(0) \neq 0$ rules that out. Some students also expand the squares, forget that the $\pm 2k_1k_2 \sin t \cos t$ cross terms cancel, and wrongly decide the sum depends on t.

Q.55 MSQ · 2 MARKS

Digital Electronics › Logic families

Q.55	Which of the following functions represent(s) the output of the CMOS logic-gate shown in the circuit below? 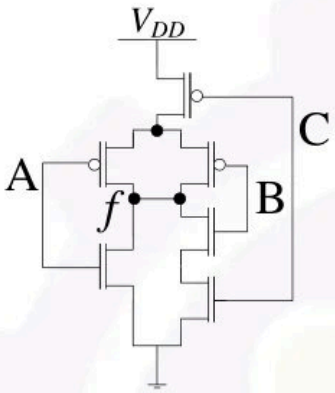
(A)	$f = \overline{A} + \overline{B} \cdot \overline{C}$
(B)	$f = \overline{A+BC}$
(C)	$f = \overline{A} \cdot (\overline{B} + \overline{C})$
(D)	$f = \overline{A \cdot (B + C)}$

Official answer: **Marks to all**

SOLUTION

1. **Read the pull-down network** (the NMOS devices between f and ground). There are two parallel branches: NMOS A on its own, and NMOS B in series with NMOS C. An NMOS conducts when its gate is 1. Series means AND and parallel means OR, so the pull-down network conducts, pulling f to 0, when $A + B \cdot C = 1$.
2. In a static CMOS gate the output is 0 exactly when the pull-down network conducts, so $f = \overline{A + BC}$. That is option (B). (A bar – means complement throughout.)
3. By De Morgan's theorem, $\overline{A + BC} = \overline{A} \cdot \overline{BC} = \overline{A} \cdot (\overline{B} + \overline{C})$. That is option (C), so (B) and (C) are the same function.
4. Options (A) and (D) are also the same function as each other: $\overline{A} + \overline{B}\,\overline{C} = \overline{A} + \overline{B + C} = \overline{A \cdot (B + C)}$. That is the output of a different gate, one whose pull-down network has A in series with (B in parallel with C).

5. **Separate the two pairs with $ABC = 011$.** NMOS B and NMOS C both conduct. PMOS C is off, which cuts off the whole pull-up path, so $f = 0$. Options (B) and (C) give $\overline{0 + 1} = 0$, which is correct. Options (A) and (D) give $\overline{A} + \overline{B}\,\overline{C} = 1 + 0 = 1$, which is wrong.
6. **Check the pull-up network as printed.** The exact dual of the pull-down network would be PMOS A in series with (PMOS B in parallel with PMOS C). The figure draws something else: PMOS C in series with (PMOS A in parallel with PMOS B). A PMOS conducts when its gate is 0, so the drawn pull-up conducts when $\overline{C} \cdot (\overline{A} + \overline{B}) = \overline{C + AB}$. Now take each input in turn. At 000 and 010 only the pull-up conducts, so $f = 1$. At 011, 101, 110 and 111 only the pull-down conducts, so $f = 0$. In all six cases $f = \overline{A + BC}$. At 100 both networks conduct, which is a direct path from V_{DD} to ground, so the output is undefined. At 001 neither network conducts and the output floats. The circuit as drawn is therefore not a valid static CMOS gate for every input.
7. **Conclusion.** On every input where the output is a defined logic level, it equals $\overline{A + BC}$. Options (A) and (D) contradict a defined output (at 011). No option equals the drawn pull-up's own function $\overline{C + AB}$: it differs from $\overline{A + BC}$ at 001 and from $\overline{A(B + C)}$ at 011. So the circuit's defined behaviour supports options (B) and (C).

KEY IDEA

For a static CMOS gate, read the NMOS pull-down network (series = AND, parallel = OR) and complement the result: here $f = \overline{A + BC}$. Then use De Morgan to spot options that are the same function written another way. Finally, check that the pull-up network is the dual. When it is not, as here, test each option only on inputs where the circuit actually gives a defined 0 or 1.

WATCH OUT FOR

Swapping series and parallel in the pull-down network gives $\overline{A(B + C)}$, so options (A) and (D) get ticked. Reading the function from the drawn pull-up (C in series with A parallel to B) gives $\overline{C + AB}$, which matches no option. A third slip in this MSQ is ticking only (B) and missing that (C) is the same function after De Morgan's theorem.

Q.56 MSQ · 2 MARKS

Digital Electronics › Processors & memory

A 16-bit processor has 16-bit wide instructions and a few internal registers. Every 16-bit instruction is encoded in a fixed format with one operation code of 7 bits and up to three operands. The operand can be an internal register and each operand is encoded by 3 bits. All the internal registers can be specified in an instruction using three bits.

The correct statement(s) for this processor is/are _____.

(A) The processor has 16 internal registers.

(B) The processor can support 128 unique operation codes (Opcodes).

(C) The processor has up to 8 internal registers.

(D) The processor can support 512 unique operation codes (Opcodes).

Official answer: **B, C**

SOLUTION

1. **Check the instruction format.** Opcode plus three operands takes $7 + 3 \times 3 = 16$ bits, which is exactly the instruction width. The format is fixed, so the opcode field is always 7 bits and each operand field is always 3 bits.
2. **Count the opcodes.** An n-bit field has 2^n distinct codes. The opcode field has 7 bits, so the processor supports $2^7 = 128$ unique opcodes. Statement (B) is true.
3. **Count the registers.** Each register is named by a 3-bit field, which gives $2^3 = 8$ distinct register addresses. The question says every internal register can be named with three bits, so there are at most 8 registers. Statement (C) is true.
4. **Reject (A).** Naming 16 registers needs $\log_2 16 = 4$ bits per operand, but the operand field has only 3 bits. With 3 bits, at least 8 of the 16 registers could not be named.

5. **Reject (D).** 512 opcodes needs $\log_2 512 = 9$ opcode bits. With three 3-bit operands that would make the instruction $9 + 3 \times 3 = 18$ bits, more than the 16 available. The question also fixes the opcode field at 7 bits, which allows only 128 codes.
6. **Answer:** (B) and (C).

KEY IDEA

An n-bit field in a fixed instruction format can encode at most 2^n distinct values. So a 7-bit opcode gives 128 opcodes, a 3-bit register field gives 8 registers, and $7 + 3 \times 3 = 16$ bits fills the instruction exactly.

WATCH OUT FOR

One mistake is to count the $16 - 7 = 9$ non-opcode bits and pick $2^9 = 512$ as the number of opcodes (D). Those 9 bits hold the three operand fields, not opcode bits. Another is to assume that a 16-bit processor must have 16 registers (A). The register count depends only on the width of the register field (3 bits), not on the processor's word length.

Q.57 NAT · 2 MARKS

Engineering Mathematics › Calculus

Let $f(t) = \begin{cases} 1, & t \in [0, 2] \\ -t + 3, & t \in [2, 3] \\ 0, & \text{otherwise} \end{cases}$

Then

$\int_{-\infty}^{\infty} f(\tau)\, d\tau =$ _____. (rounded off to one decimal place)

Official answer: **2.4 to 2.6**

SOLUTION

1. f is 0 outside $[0, 3]$, so the infinite integral reduces to a finite one: $\int_{-\infty}^{\infty} f(\tau)\, d\tau = \int_{0}^{3} f(\tau)\, d\tau$.
2. Split at the breakpoint $\tau = 2$ using additivity of the definite integral: $\int_0^3 f\, d\tau = \int_0^2 1\, d\tau + \int_2^3 (3 - \tau)\, d\tau$. Both formulas give $f(2) = 1$, so the two pieces agree at the joint. A single point has zero width and could not change the integral anyway.
3. First piece, a rectangle of height 1 and width 2: $\int_0^2 1\, d\tau = 2$.
4. Second piece, a straight line falling from 1 at $\tau = 2$ to 0 at $\tau = 3$:
$$\int_2^3 (3 - \tau)\, d\tau = \left[3\tau - \frac{\tau^2}{2}\right]_2^3 = \left(9 - \frac{9}{2}\right) - (6 - 2) = 4.5 - 4 = 0.5$$
This matches the area of a triangle with base 1 and height 1: $\frac{1}{2} \times 1 \times 1 = 0.5$.
5. Add the pieces: $\int_{-\infty}^{\infty} f(\tau)\, d\tau = 2 + 0.5 = 2.5$.

KEY IDEA

For a piecewise function, the integral over the whole real line is the total signed area under its graph. Here that is a rectangle on $[0, 2]$ (area 2) plus a right triangle on $[2, 3]$ (area 0.5). Where $f = 0$, nothing is added.

WATCH OUT FOR

Integrating $-\tau + 3$ over $[0, 3]$ as if it applied everywhere gives 4.5. Using τ in place of $3 - \tau$ on $[2, 3]$ gives 2.5 for that piece and a total of 4.5. Both come from misreading which formula belongs to which interval. Some students also drop the rectangle and report only the triangle, 0.5.

Q.58 NAT · 2 MARKS

Electrical Machines › Transformers

A single phase transformer has a rating of 10 kVA, 50 Hz, 1100 V/ 220 V. In an open circuit test with the high voltage side open, the following are obtained:
- Voltage applied to the low voltage winding = 220 V
- Measured power = 363 W
- Measured current = 2.75 A

Magnetizing reactance X_m referred to the high voltage winding is _____ Ω.
(rounded off to the nearest integer)

Official answer: **2490 to 2510**

SOLUTION

1. Open-circuit test is performed with the LV winding energized and the HV side open, so V0 = 220 V, I0 = 2.75 A, and P0 = 363 W are all LV-side quantities.
2. Working (core-loss) component of no-load current: $I_w = \dfrac{P_0}{V_0} = \dfrac{363}{220} = 1.65\ \text{A}.$
3. Magnetizing component: $I_m = \sqrt{I_0^2 - I_w^2} = \sqrt{2.75^2 - 1.65^2} = \sqrt{7.5625 - 2.7225} = \sqrt{4.84} = 2.2\ \text{A}.$
4. Magnetizing reactance on the LV side (the side where the test was done): $X_{m,\text{LV}} = \dfrac{V_0}{I_m} = \dfrac{220}{2.2} = 100\ \Omega$.
5. Turns ratio (HV/LV): $a = \dfrac{1100}{220} = 5.$
6. Refer X_m to the HV side by multiplying by a^2: $X_{m,\text{HV}} = a^2 \times X_{m,\text{LV}} = 25 \times 100 = 2500\ \Omega.$

KEY IDEA

In an open-circuit test performed from a given winding, the no-load current I0 splits into an in-phase (core-loss) component Iw = P0/V0 and a quadrature (magnetizing) component Im = sqrt(I0² − Iw²); the magnetizing reactance on the test side is V0/Im, and to refer any impedance/reactance from the LV side to the HV side it is multiplied by the square of the turns ratio a = (HV rated voltage / LV rated voltage).

WATCH OUT FOR

Forgetting to refer the LV-side magnetizing reactance to the HV side (i.e., stopping at 100 Ω), or applying the turns ratio the wrong way (dividing by a² instead of multiplying), since the OC test was performed from the LV side but the question asks for Xm referred to the HV side.

Q.59 NAT · 2 MARKS

Control Systems › Time response

A linear time invariant (LTI) system has a transfer function

$$G(s) = \frac{10(s+1)}{s(s^2+2s+5)}$$

The system is placed in unity negative feedback configuration.

For a unit ramp reference, the steady state error is _____.

(rounded off to two decimal places)

Official answer: **0.49 to 0.51**

SOLUTION

1. **Check closed-loop stability first, because the final value theorem only applies to a stable loop.** The characteristic equation is $1 + G(s) = 0$:

$$s(s^2+2s+5) + 10(s+1) = s^3 + 2s^2 + 15s + 10 = 0$$

2. **Routh array:** row s^3: $1,\ 15$; row s^2: $2,\ 10$; row s^1: $\dfrac{2\cdot 15 - 1\cdot 10}{2} = 10$; row s^0: 10. The first column $1,\ 2,\ 10,\ 10$ has no sign change, so the closed loop is stable.
3. **Find the system type.** $G(s)$ has one pole at the origin, so the loop is type 1. A type-1 loop follows a ramp with a finite, non-zero steady-state error.
4. **Velocity error constant K_v:**

$$K_v = \lim_{s\to 0} sG(s) = \lim_{s\to 0} \frac{10(s+1)}{s^2+2s+5} = \frac{10\cdot 1}{5} = 2$$

5. **Steady-state error for a unit ramp $R(s) = 1/s^2$:**

$$e_{ss} = \lim_{s\to 0} \frac{s\,R(s)}{1+G(s)} = \lim_{s\to 0} \frac{1}{s+sG(s)} = \frac{1}{K_v} = \frac{1}{2} = 0.50$$

KEY IDEA

In a unity-feedback loop, the ramp error depends only on the velocity constant: $e_{ss} = 1/K_v$ with $K_v = \lim_{s\to 0} sG(s)$. That formula is only valid once you have confirmed the closed loop is stable, which here takes a quick Routh check on $s^3 + 2s^2 + 15s + 10$.

WATCH OUT FOR

One slip is to cancel the s wrongly and use the zero at $s = -1$ or the numerator gain alone, giving $K_v = 10$ and $e_{ss} = 0.1$. The correct value is $K_v = 10\cdot 1/5 = 2$, because the constant term 5 of $s^2 + 2s + 5$ divides the gain. Another mistake is to skip the stability check. If the loop were unstable, $1/K_v$ would give a meaningless number.

Q.60 NAT · 2 MARKS

Control Systems › Bode & margins

The system $G(s) = \dfrac{K}{(s+1)^4}$ has a gain margin of 20 dB. The value of K is _____. (rounded off to two decimal places)

Official answer: **0.39 to 0.41**

SOLUTION

1. Phase of the open-loop transfer function. All four poles sit at $s = -1$, so

$$\angle G(j\omega) = -4\tan^{-1}\omega$$

This falls steadily from 0° at $\omega = 0$ towards -360° as $\omega \to \infty$, so it passes through -180° exactly once.

2. Phase-crossover frequency (where the phase is -180°):

$$4\tan^{-1}\omega_{pc} = 180^\circ \ \Rightarrow\ \tan^{-1}\omega_{pc} = 45^\circ \ \Rightarrow\ \omega_{pc} = 1\ \text{rad/s}$$

3. Magnitude at ω_{pc}:

$$|G(j\omega_{pc})| = \frac{K}{\left(\sqrt{\omega_{pc}^2+1}\right)^4} = \frac{K}{(\sqrt{2})^4} = \frac{K}{4}$$

4. Use the definition of gain margin:

$$GM = -20\log_{10}|G(j\omega_{pc})| = 20\ \text{dB} \ \Rightarrow\ |G(j\omega_{pc})| = 10^{-1} = 0.1$$

5. Solve for K:

$$\frac{K}{4} = 0.1 \ \Rightarrow\ K = 0.40$$

KEY IDEA

Gain margin is read at the phase-crossover frequency. With four identical poles at $s = -1$, each pole adds -45° at $\omega = 1\ \text{rad/s}$, so the total phase is -180° there. A 20 dB gain margin means $|G(j\omega_{pc})| = 0.1$, which gives $K/4 = 0.1$.

WATCH OUT FOR

Setting $|G(j\omega_{pc})| = 10$ instead of 0.1 (sign slip in $GM = -20\log_{10}|G|$), which gives $K = 40$. Another slip is writing $(\sqrt{2})^4$ as 2 instead of 4, which gives $K = 0.2$. Some students also take the gain-crossover frequency ($|G| = 1$) in place of the phase-crossover frequency.

Q.61 NAT · 2 MARKS

Analog Electronics › Filters & waveforms

Q.61 In the phase-locked-loop circuit shown below, the output of the VCO is a digital square wave.

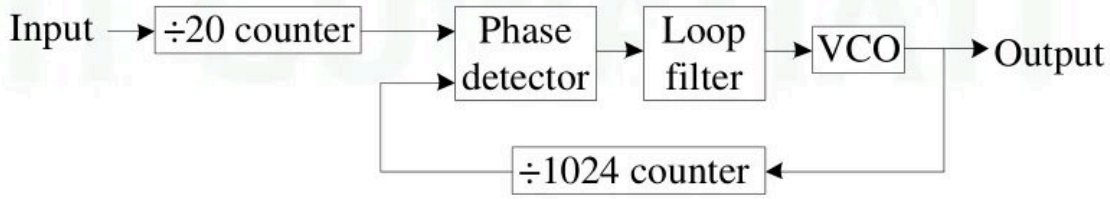

If the input is a square wave at 10 kHz, the steady state frequency of the output is _____ kHz. *(rounded off to the nearest integer)*

Official answer: **512**

SOLUTION

1. Reference input to the phase detector. The input first passes through the $\div 20$ counter, so the phase detector sees
$$f_{\text{ref}} = \frac{10\ \text{kHz}}{20} = 500\ \text{Hz}$$
2. Feedback input to the phase detector. The VCO output is fed back through the $\div 1024$ counter, so the phase detector's second input is at $f_{\text{fb}} = \dfrac{f_{\text{out}}}{1024}$.
3. Lock condition. Assume the loop locks, i.e. the required VCO frequency lies within its range. In steady state the two phase-detector inputs must then have the same frequency, and only a constant phase difference can remain (if the frequencies differed, the phase error would keep growing and the loop filter would keep moving the VCO). So $f_{\text{fb}} = f_{\text{ref}}$.
4. Solve for the output frequency:
$$\frac{f_{\text{out}}}{1024} = 500\ \text{Hz} \ \Rightarrow\ f_{\text{out}} = 1024 \times 500\ \text{Hz} = 512\,000\ \text{Hz} = 512\ \text{kHz}$$
5. General check. A PLL frequency synthesiser with an input divider M and a feedback divider N gives $f_{\text{out}} = \dfrac{N}{M} f_{\text{in}} = \dfrac{1024}{20} \times 10\ \text{kHz} = 512\ \text{kHz}$. This is already an integer, so no rounding is needed.

KEY IDEA

When a PLL is locked, both inputs of the phase detector run at the same frequency. With a divide-by-M counter on the reference path and a divide-by-N counter in the feedback path, $f_{\text{in}}/M = f_{\text{out}}/N$, so $f_{\text{out}} = (N/M)\, f_{\text{in}}$. This is how an integer-N frequency synthesiser works.

WATCH OUT FOR

Swapping the two dividers, which gives $(20/1024) \times 10\ \text{kHz} \approx 0.2\ \text{kHz}$. The divider in the feedback path multiplies the output frequency and the reference divider divides it. Other slips: ignoring the $\div 20$ counter and answering $1024 \times 10\ \text{kHz} = 10\,240\ \text{kHz}$, or giving the answer in Hz (512000) when the blank asks for kHz.

Q.62 NAT · 2 MARKS

Electrical and Electronic Measurements › Time, frequency & scopes

A digital counter increments its count every 0.1 μs. The counter is used in an instrument to measure frequency. The counter is operated for one period of the input signal to the instrument to measure its frequency. The input signal is approximately at 100 kHz. The maximum error in the measured frequency is _____ kHz. (rounded off to the nearest integer)

Official answer: **1**

SOLUTION

1. **Period (reciprocal) mode.** One period of the input signal opens the counter gate. During that period the counter counts clock ticks, one every $T_c = 0.1\ \mu\text{s}$, and the frequency is taken as $f = 1/T$.
2. **Number of counts.** The input period is $T = \dfrac{1}{100\ \text{kHz}} = 10\ \mu\text{s}$, so the counter records $N = \dfrac{T}{T_c} = \dfrac{10\ \mu\text{s}}{0.1\ \mu\text{s}} = 100$ counts.
3. **The ± 1 count error.** The gate is not synchronised with the clock, so the count can be off by one either way. The measured period is therefore uncertain by $\pm T_c = \pm 0.1\ \mu\text{s}$. That is a relative error of $\pm\dfrac{1}{N} = \pm\dfrac{1}{100} = \pm 1\%$.
4. **Carry it to frequency.** Since $f = 1/T$, to first order the relative error in f equals the relative error in T:
$$\Delta f = f \cdot \frac{1}{N} = 100\ \text{kHz} \times 0.01 = 1\ \text{kHz}$$
5. **Exact check.** The measured period lies between $9.9\ \mu\text{s}$ and $10.1\ \mu\text{s}$, so the measured frequency lies between $\dfrac{1}{10.1\ \mu\text{s}} = 99.01\ \text{kHz}$ and $\dfrac{1}{9.9\ \mu\text{s}} = 101.01\ \text{kHz}$. The largest deviation from $100\ \text{kHz}$ is $1.01\ \text{kHz}$, which rounds to $1\ \text{kHz}$.

KEY IDEA

When a counter measures over one input period, it counts $N = T/T_c$ clock ticks and carries the usual ± 1 count error. That makes the relative error $1/N$, and because $f = 1/T$ the frequency has the same relative error: $\Delta f \approx f/N = f^2 T_c$.

WATCH OUT FOR

Using the frequency-mode formula (error $= \pm 1/T_{\text{gate}}$ with a 0.1 µs gate), which gives an absurd ± 10 MHz. Another slip is writing the error as $\pm T_c = 0.1\ \mu\text{s}$ and never converting it from time to frequency. Here the counter counts the clock during one input period, so the ± 1 count is a $\pm 1\%$ error on T, and so on f.

Q.63 NAT · 2 MARKS

Sensors and Industrial Instrumentation › Sensing principles

A current carrying semiconductor of thickness 0.7 mm is placed in a transverse magnetic field. The measured Hall voltage is 0.9 mV and the current is 6 mA. If the Hall coefficient is 4 x 10^-4 m^3/C, the value

of the incident magnetic field is _____ T. (rounded off to two decimal places)

Official answer: **0.25 to 0.27**

SOLUTION

1. For a slab of thickness t measured along the magnetic field, carrying current I, the Hall voltage is $V_H = \dfrac{R_H\, I\, B}{t}$.
2. Solve for the field: $B = \dfrac{V_H\, t}{R_H\, I}$.
3. Convert to SI units: $V_H = 0.9 \times 10^{-3}$ V, $t = 0.7 \times 10^{-3}$ m, $I = 6 \times 10^{-3}$ A, $R_H = 4 \times 10^{-4}$ m^3/C.
4. Substitute:
$$B = \frac{0.9 \times 10^{-3} \times 0.7 \times 10^{-3}}{4 \times 10^{-4} \times 6 \times 10^{-3}} = \frac{6.3 \times 10^{-7}}{2.4 \times 10^{-6}} = 0.2625 \text{ T}$$
5. Rounded to two decimal places, $B \approx 0.26$ T.

KEY IDEA

Use the Hall relation $V_H = R_H I B/t$, where t is the sample dimension along the field. Rearrange to $B = V_H t/(R_H I)$ and convert every quantity to SI units (mV to V, mm to m, mA to A) before substituting.

WATCH OUT FOR

Leaving mm, mV or mA unconverted, which shifts the answer by powers of ten. Another slip is writing $V_H = R_H I B/w$ with the width instead of the thickness along the field. The thickness is the only length given here.

Q.64 NAT · 2 MARKS

Sensors and Industrial Instrumentation › Optical

For a fiber Bragg grating-based sensor, the shift in the Bragg wavelength gives information about the value of the measurand. For a Bragg wavelength of 1550 nm and effective index of 1.44, the grating period is _____ nm. (rounded off to two decimal places)

Official answer: **537.00 to 539.00**

SOLUTION

1. For a first-order fibre Bragg grating, the Bragg condition is $\lambda_B = 2\, n_{\text{eff}}\, \Lambda$.
2. Rearrange for the grating period: $\Lambda = \dfrac{\lambda_B}{2\, n_{\text{eff}}}$.
3. Substitute $\lambda_B = 1550$ nm and $n_{\text{eff}} = 1.44$: $\Lambda = \dfrac{1550}{2 \times 1.44} = \dfrac{1550}{2.88}$.
4. Divide: $\Lambda \approx 538.19$ nm.

KEY IDEA

A fibre Bragg grating reflects the wavelength that satisfies $\lambda_B = 2n_{\text{eff}}\Lambda$ (first order). Given the Bragg wavelength and effective index, the period is $\lambda_B/(2n_{\text{eff}})$.

WATCH OUT FOR

Leaving out the factor 2 and using $\Lambda = \lambda_B/n_{\text{eff}}$, which gives about 1076.39 nm, twice the correct value.

Q.65 NAT · 2 MARKS

Sensors and Industrial Instrumentation › Optical

A photodiode has a responsivity 0.8 A/W. If the input optical power to the photodiode is 2 mW, the power delivered to a 50 Ω load is _____ µW. (rounded off to the nearest integer)

Official answer: **128**

SOLUTION

1. Responsivity is photocurrent per unit incident optical power: $R = \dfrac{I_{ph}}{P_{opt}}$.
2. $I_{ph} = R\, P_{opt} = 0.8 \text{ A/W} \times 2 \times 10^{-3} \text{ W} = 1.6 \text{ mA}$.

3. The photodiode acts as a current source of value I_{ph}, so all of this current flows through the $50\ \Omega$ load.

4. Power in the load: $P_L = I_{ph}^2 R_L = (1.6 \times 10^{-3}\ \text{A})^2 \times 50\ \Omega$.

5. $P_L = 2.56 \times 10^{-6} \times 50 = 128 \times 10^{-6}\ \text{W} = 128\ \mu\text{W}$.

KEY IDEA

A photodiode behaves as a current source whose current is responsivity times optical power. Find that current first, then the load power from I^2R.

WATCH OUT FOR

Confusing optical power with electrical power, for example reading 0.8 × 2 mW = 1.6 mW as the load power. The optical power must first be converted to a photocurrent, and the electrical power then comes from I^2R_L.

FROM IAE ACADEMY

Preparing for GATE IN?

IAE Academy teaches GATE IN in Ballygunge, Kolkata, and online. Counselling is free: ask us about batches, fees or your preparation.

FREE COUNSELLING

Chat on WhatsApp

Call +91 84204 36524

Open every day, 10:30 am to 7:30 pm.

Scan to chat on WhatsApp

THE GATE IN COURSE

Classroom batches in Ballygunge and online batches. Fees and details are on the course page.

Scan: course page

See the course

FREE ON IAEACADEMY.IN

More GATE IN papers, question by question with the official answers, and free notes by subject.

Scan: more papers

More solved papers

Found this useful? Send it to a friend preparing for GATE.

Send to a friend on WhatsApp

IAE Academy free study material. The questions are those of the GATE IN 2026 question paper, organised by IIT Guwahati; the answers are from its official answer key. Prepared and published by IAE Academy, Kolkata. Free to read and free to share, unaltered and with attribution. Not affiliated with, endorsed by or produced by IIT Guwahati or the GATE committee.

IAE ACADEMY INSTITUTE FOR ENGINEERS

GATE coaching in Kolkata since 2012 · EC, EE, IN, CS and IT, DA, BT and CE · in the classroom and online

227A Rash Behari Ave, Ballygunge, Kolkata 700019

+91 84204 36524 · iaeacademy.in · Updated 20 October 2026

Get directions