IAE ACADEMY INSTITUTE FOR ENGINEERS

GATE IN · 2025

IAE Academy free study material · Updated 20 October 2026

GATE IN 2025 Solved Paper

INSIDE

- All 65 questions, in the order of the paper
- The official answer to every question
- Step-by-step worked solutions
- The answer key on one page

Question paper and official answer key: IIT Roorkee

Online, with the questions linked to their topic notes: **iaeacademy.in/study/papers/in-2025**

FREE COUNSELLING

Preparing for GATE IN? Talk to IAE Academy.

Or call **+91 84204 36524**

Every day, 10:30 am to 7:30 pm

Chat on WhatsApp

Free. Not for sale. Pass it on.

About this paper

65 questions, 100 marks. Question types: 43 MCQ · 4 MSQ · 18 NAT.

Official answer key: IIT Roorkee · https://gate2025.iitr.ac.in/doc/2025/2025_Key/IN_Keys.pdf

We placed each question under a subject and topic ourselves; the exam paper does not label them.

This paper online, with the questions linked to their topic notes:
iaeacademy.in/study/papers/in-2025

Answer key

Q	TYPE	MARKS	ANSWER
Q.1	MCQ	1	**C**
Q.2	MCQ	1	**C**
Q.3	MCQ	1	**A**
Q.4	MCQ	1	**A**
Q.5	MCQ	1	**B**
Q.6	MCQ	2	**B**
Q.7	MCQ	2	**B**
Q.8	MCQ	2	**A**
Q.9	MCQ	2	**D**
Q.10	MCQ	2	**C**
Q.11	MCQ	1	**A**
Q.12	MCQ	1	**A**
Q.13	MCQ	1	**D**
Q.14	MCQ	1	**C**
Q.15	MCQ	1	**D**
Q.16	MCQ	1	**B**
Q.17	MCQ	1	**A**
Q.18	MCQ	1	**A**
Q.19	MCQ	1	**A**
Q.20	MCQ	1	**A**
Q.21	MCQ	1	**A**
Q.22	MCQ	1	**D**
Q.23	MCQ	1	**C**
Q.24	MCQ	1	**A**
Q.25	MCQ	1	**A**
Q.26	MCQ	1	**C**
Q.27	MCQ	1	**D**
Q.28	MCQ	1	**B**
Q.29	MCQ	1	**B**
Q.30	MCQ	1	**A**
Q.31	MSQ	1	**B, C, D**
Q.32	NAT	1	**2**
Q.33	NAT	1	**2**
Q.34	NAT	1	**125**
Q.35	NAT	1	**3.90 to 4.10**
Q.36	MCQ	2	**B**
Q.37	MCQ	2	**D**
Q.38	MCQ	2	**C**
Q.39	MCQ	2	**C**
Q.40	MCQ	2	**A**
Q.41	MCQ	2	**A**
Q.42	MCQ	2	**C**
Q.43	MCQ	2	**A**
Q.44	MCQ	2	**C**
Q.45	MCQ	2	**C**
Q.46	MCQ	2	**A**
Q.47	MCQ	2	**B**
Q.48	MCQ	2	**A**
Q.49	MSQ	2	**A, B**
Q.50	MSQ	2	**A, B, C**
Q.51	MSQ	2	**A, C**
Q.52	NAT	2	**0.72 to 0.76**
Q.53	NAT	2	**1.75 to 1.85**
Q.54	NAT	2	**5**
Q.55	NAT	2	**24.5 to 25.5**
Q.56	NAT	2	**1.55 to 1.65**
Q.57	NAT	2	**4.00 to 4.40**
Q.58	NAT	2	**2160 to 2210**
Q.59	NAT	2	**Marks to all**
Q.60	NAT	2	**31.00 to 31.50**
Q.61	NAT	2	**9**
Q.62	NAT	2	**4.5 to 5.5**
Q.63	NAT	2	**4.60 to 5.00**
Q.64	NAT	2	**1.50 to 1.54**
Q.65	NAT	2	**590 to 610**

General Aptitude Q.1 to Q.10

Q.1 MCQ · 1 MARK

General Aptitude › Grammar & vocabulary

Despite his initial hesitation, Rehman's _____ to contribute to the success of the project never wavered.

Select the most appropriate option to complete the above sentence.

(A) ambivalence

(B) satisfaction

(C) resolve

(D) revolve

Official answer: **C**

SOLUTION

1. Start with the clue words. "Despite" sets up a contrast with "initial hesitation", and "never wavered" says the missing quality stayed firm. So the blank needs a noun meaning firm determination, the opposite of hesitation.
2. An infinitive follows the blank ("_____ to contribute"), so the noun must be one that naturally takes "to + verb", as in "resolve to do something" or "determination to do something".
3. (A) ambivalence means mixed feelings or uncertainty. That is close to hesitation, so it cancels the contrast that "Despite" sets up. Uncertainty is also not something that "never wavered".
4. (B) satisfaction means contentment with something already done. It does not express an intention "to contribute", and it has no link to overcoming hesitation.
5. (D) revolve is a verb meaning to turn around a centre. After the possessive "Rehman's" the sentence needs a noun, so grammar rules it out. "Revolve" is only a look-alike of "resolve".
6. (C) resolve, used as a noun, means firm determination to do something. "Rehman's resolve to contribute ... never wavered" is grammatical, contrasts properly with "initial hesitation", and fits "never wavered". Answer: (C).

KEY IDEA

Let the contrast signal and the grammar make the choice. "Despite ... hesitation" plus "never wavered" asks for firm determination. The possessive "Rehman's" in front and the infinitive "to contribute" after both call for a noun that takes "to + verb", and "resolve" (noun) is the only option that works.

WATCH OUT FOR

Picking "revolve" because it looks like "resolve" (it is a verb and means turning around a centre), or picking "ambivalence" because it sounds sophisticated. Ambivalence means about the same as hesitation, so it wipes out the contrast that "Despite" sets up.

Q.2 MCQ · 1 MARK

General Aptitude › Reasoning

Bird : Nest :: Bee : _____

Select the correct option to complete the analogy.

(A) Kennel

(B) Hammock

(C) Hive

(D) Lair

Official answer: **C**

SOLUTION

1. Name the relation in the first pair. A **nest** is the home a **bird** builds for itself, where it lives and raises its young. So the relation is *creature : the dwelling it lives in and raises its young in*.
2. Apply the same relation to the second pair. We need the home in which a **bee** lives and its colony raises its young.
3. Check each option. (A) Kennel: a shelter that people build for a **dog**. It is not a bee's home, so the relation fails.
4. (B) Hammock: a hanging bed that people use. It is not an animal's home at all.
5. (D) Lair: the den of a wild beast such as a lion or a wolf. A bee does not live in a lair.
6. (C) Hive: the place where a colony of bees lives, stores its wax comb and raises its brood. The bees build the comb themselves, just as a bird builds its nest.
7. Only **Hive** keeps the same relation, so Bird : Nest :: Bee : Hive. The answer is (C).

KEY IDEA

Put the first pair's relation into one sentence ("a nest is the home of a bird") and then test every option in that same sentence for the second word ("a ___ is the home of a bee"). Only the option that fits the sentence exactly is correct.

WATCH OUT FOR

Picking Lair or Kennel only because each is some animal's home. That matches the general category (animal home) but not the specific animal. A kennel belongs to a dog and a lair to a wild beast. Only a hive belongs to a bee.

Q.3 MCQ · 1 MARK

General Aptitude › Numerical

If $Pe^{x} = Qe^{-x}$ for all real values of x, which one of the following statements is true?

(A) $P = Q = 0$

(B) $P = Q = 1$

(C) $P = 1;\ Q = -1$

(D) $\dfrac{P}{Q} = 0$

Official answer: **A**

SOLUTION

1. Multiply both sides by e^{x}, which is never zero:
$$Pe^{2x} = Q \quad \text{for every real } x.$$
The right side is a constant, so the left side must also be constant for every x.
2. Put $x = 0$. Since $e^{0} = 1$, this gives $P = Q$.
3. Substitute $Q = P$ back: $Pe^{2x} - P = 0$, that is,
$$P\left(e^{2x} - 1\right) = 0 \quad \text{for all } x.$$
4. Take any $x \neq 0$, for example $x = 1$. Then $e^{2} - 1 \neq 0$, so $P = 0$, and hence $Q = P = 0$. Option (A) holds.
5. Check the other options. (B): $P = Q = 1$ would need $e^{x} = e^{-x}$ for all x, which fails at $x = 1$. (C): $P = 1,\ Q = -1$ would need $e^{x} = -e^{-x}$, which is impossible because the left side is positive and the right side is negative. (D): $\dfrac{P}{Q} = 0$ needs $P = 0$ with $Q \neq 0$, but $P = 0$ forces $Q = 0$, so $\dfrac{P}{Q}$ is not even defined.
6. So the only true statement is (A): $P = Q = 0$.

KEY IDEA

$Pe^{x} = Qe^{-x}$ for every x means $Pe^{2x} = Q$ for every x. A non-zero multiple of e^{2x} is never constant, so the identity can only hold if $P = 0$, and then $Q = 0$ too. Put in two values of x ($x = 0$ gives $P = Q$, and any $x \neq 0$ then gives $P = 0$).

WATCH OUT FOR

Using only $x = 0$, getting $P = Q$, and then choosing (B) $P = Q = 1$. The words "for all real values of x" are what force $P = Q = 0$. Another trap is choosing (D) because $P = 0$: once $Q = 0$ as well, $\frac{P}{Q}$ is undefined, not zero.

Q.4 MCQ · 1 MARK

General Aptitude › Spatial

Q.4 The paper as shown in the figure is folded to make a cube where each square corresponds to a particular face of the cube. Which one of the following options correctly represents the cube?

Note: The figures shown are representative.

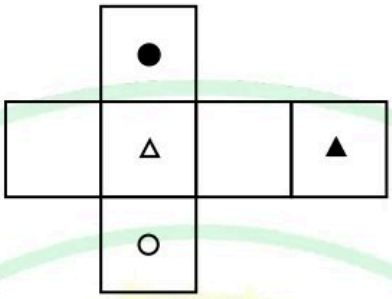

(A)

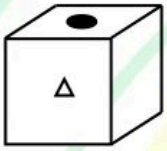

(B)

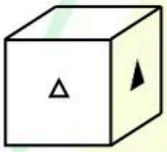

(C)

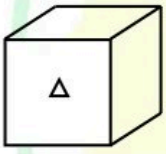

(D)

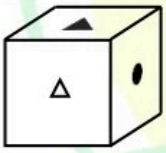

Official answer: **A**

SOLUTION

1. Rule for a cross-shaped net: along any straight line of squares, two squares with exactly one square between them fold onto opposite faces, and a square's four edge-sharing neighbours fold onto the

four faces adjacent to it.

2. Fold with the open triangle △ as the front face. The square above it (filled circle ●) becomes the top, the square below it (open circle ○) becomes the bottom, and the blank squares on its left and right become the left and right faces.
3. The fourth square in the middle row (filled triangle ▲) is two squares from △, with the blank square between them, so it folds round to the back.
4. The opposite pairs are therefore △ ↔ ▲, ● ↔ ○ and blank ↔ blank (the first and third squares of the middle row). Opposite faces can never be seen together on one cube drawing.
5. (B) shows △ and ▲ next to each other. They are opposite faces, so (B) is impossible.
6. (D) shows △ on the front and ▲ on top. These are opposite faces too, so (D) is impossible.
7. (C) shows two blank faces next to each other (top and right). The only two blank faces are opposite each other, so (C) is impossible.
8. (A) shows △ on the front, ● on top and a blank face on the right. This matches the fold in step 2 exactly: ● is on the edge the triangle's apex points to, and the blank square to the right of △ in the net becomes the right face. So (A) is correct.

KEY IDEA

In a cross-shaped net, two squares with exactly one square between them fold onto opposite faces. That gives the pairs open triangle / filled triangle, filled circle / open circle and blank / blank. Any cube drawing that shows two faces from the same pair side by side is impossible, and that rules out (B), (C) and (D).

WATCH OUT FOR

Picking (C) because blank faces look like they cannot contradict anything. The net has only two blank squares, and they are opposite each other (first and third in the middle row), so two blank faces can never share an edge. A second trap is assuming the two triangles are adjacent because they sit in the same row of the net. In fact they are two squares apart, so they are opposite faces.

Q.5 MCQ · 1 MARK

General Aptitude › Numerical

Let p_1 and p_2 denote two arbitrary prime numbers. Which one of the following statements is correct for all values of p_1 and p_2?

(A) $p_1 + p_2$ is not a prime number.

(B) $p_1 p_2$ is not a prime number.

(C) $p_1 + p_2 + 1$ is a prime number.

(D) $p_1 p_2 + 1$ is a prime number.

Official answer: **B**

SOLUTION

1. The statement has to hold for **every** pair of primes, so one counterexample is enough to rule an option out.
2. (A) Take $p_1 = 2,\ p_2 = 3$. Then $p_1 + p_2 = 5$, which is prime. So (A) fails.
3. (C) Take $p_1 = 2,\ p_2 = 3$. Then $p_1 + p_2 + 1 = 6 = 2 \times 3$, which is not prime. So (C) fails.
4. (D) Take $p_1 = 3,\ p_2 = 5$. Then $p_1 p_2 + 1 = 16 = 2^4$, which is not prime. So (D) fails.
5. (B) A prime has no positive divisors other than 1 and itself. $p_1 p_2$ is divisible by p_1, and $1 < p_1 < p_1 p_2$: the first inequality holds because $p_1 \geq 2$, and the second because $p_2 \geq 2$ gives $p_1 p_2 \geq 2p_1 > p_1$. So $p_1 p_2$ has a divisor other than 1 and itself, which makes it composite. This covers $p_1 = p_2$ as well, since p^2 has the divisor p.
6. So $p_1 p_2$ is never prime, and (B) holds for every pair of primes.

KEY IDEA

"For all values" means one counterexample kills an option. Test small primes, including 2, the only even prime. Prove the option that survives from the definition: a product of two numbers each at least 2 is always composite.

WATCH OUT FOR

Two traps here. For (A), students often think "the sum of two primes is even, so it is not prime", which forgets the prime 2 ($2+3=5$). For (D), students often pick it because $2\times3+1=7$ is prime, which half-remembers Euclid's argument. Euclid's argument only shows that p_1p_2+1 has a prime factor outside $\{p_1,p_2\}$, not that it is prime itself, and $3\times5+1=16$ is a counterexample.

Q.6 MCQ · 2 MARKS

General Aptitude › Reading

Based only on the conversation below, identify the logically correct inference:

“Even if I had known that you were in the hospital, I would not have gone there to see you”, Ramya told Josephine.

(A) Ramya knew that Josephine was in the hospital.

(B) Ramya did not know that Josephine was in the hospital.

(C) Ramya and Josephine were once close friends; but now, they are not.

(D) Josephine was in the hospital due to an injury to her leg.

Official answer: **B**

SOLUTION

1. The sentence is a third conditional, also called a past counterfactual. It has the pattern **if + had + past participle** ("had known"), followed by **would not have + past participle** ("would not have gone"). This pattern describes an imagined past situation that did not actually happen.
2. In a past counterfactual, the if-clause is contrary to fact. "If I had known that you were in the hospital" therefore tells us that Ramya did **not** know Josephine was in the hospital.
3. "Even if" adds only that knowing would have changed nothing: Ramya still would not have visited. It does not cancel the contrary-to-fact meaning carried by "had known".
4. (A) says the opposite of what the if-clause implies, so it is ruled out.
5. (C) goes beyond the text. Refusing to visit might hint at a strained relationship, but the sentence never says the two were once close friends or that the friendship has ended.
6. (D) adds a detail (an injury to her leg) that the conversation never mentions, so it cannot be inferred.
7. The only inference the sentence alone forces is (B): Ramya did not know that Josephine was in the hospital.

KEY IDEA

A past counterfactual ("If I had known …, I would not have …") presents its if-clause as contrary to fact. So "had known" tells you the speaker did not know. "Even if" only adds that knowing would have made no difference to the outcome.

WATCH OUT FOR

Picking (C) because refusing to visit sounds hostile. The question asks for what follows from the sentence alone, and nothing in it mentions a past friendship. Another trap is reading "even if" as a sign that Ramya did know (option A). The past-perfect "had known" is what marks the condition as unreal.

Q.7 MCQ · 2 MARKS

General Aptitude › Reasoning

If IMAGE and FIELD are coded as FHBNJ and EMFJG respectively then, which one among the given options is the most appropriate code for BEACH ?

(A) CEADP

(B) IDBFC

(C) JGIBC

(D) IBCEC

Official answer: **B**

SOLUTION

1. Compare the letters position by position first: I→F, M→H, A→B, G→N, E→J. The shifts are $-3, -5, +1, +7, +5$, all different, so the code is not a plain letter shift. The first code letter F is E + 1, and E is the last letter of IMAGE. That suggests the word is reversed first.
2. Reverse IMAGE to get E G A M I, then move each letter one place forward in the alphabet ($+1$): E→F, G→H, A→B, M→N, I→J. This gives FHBNJ, which matches the given code.
3. Check the rule on FIELD. Reversed, it is D L E I F, and $+1$ on each letter gives E M F J G = EMFJG. This also matches, so the rule is: reverse the word, then shift every letter by $+1$.
4. Apply the rule to BEACH. Reversed, it is H C A E B.
5. Shift each letter by $+1$: H→I, C→D, A→B, E→F, B→C. This gives IDBFC, which is option (B).
6. Quick elimination: the code must start with I (H + 1) and end with C (B + 1). Only IDBFC (B) and IBCEC (D) fit. D fails at the second letter, because C + 1 = D, not B.

KEY IDEA

Each code is the word written backwards, with every letter then moved one place forward in the alphabet ($+1$). Find the rule from IMAGE, check it on FIELD, then apply it to BEACH.

WATCH OUT FOR

Comparing letters in the same position (I with F, M with H, and so on) gives unrelated shifts, and students then give up or guess. Another slip is shifting the letters without reversing the word. That turns BEACH into CFBDI, which is not among the options.

Q.8 MCQ · 2 MARKS

General Aptitude › Data interpretation

Q.8 Which one of the following options is correct for the given data in the table?

Iteration (i)	0	1	2	3
Input (I)	20	−4	10	15
Output (X)	20	16	26	41
Output (Y)	20	−80	−800	−12000

(A) $X(i) = X(i-1) + I(i); \quad Y(i) = Y(i-1)I(i); \quad i > 0$

(B) $X(i) = X(i-1)I(i); \quad Y(i) = Y(i-1) + I(i); \quad i > 0$

(C) $X(i) = X(i-1)I(i); \quad Y(i) = Y(i-1)I(i); \quad i > 0$

(D) $X(i) = X(i-1) + I(i); \quad Y(i) = Y(i-1)I(i-1); \quad i > 0$

Official answer: **A**

SOLUTION

1. Start with X. Adding each input to the previous output fits every column: $20 + (-4) = 16$, $16 + 10 = 26$, $26 + 15 = 41$. So $X(i) = X(i-1) + I(i)$.
2. Multiplying does not fit X: $X(0)\,I(1) = 20 \times (-4) = -80 \neq 16$. That rules out (B) and (C).
3. Now Y. Multiplying the previous output by the current input fits every column: $20 \times (-4) = -80$, $(-80) \times 10 = -800$, $(-800) \times 15 = -12000$. So $Y(i) = Y(i-1)\,I(i)$.
4. Check the lagged form in (D): $Y(1) = Y(0)\,I(0) = 20 \times 20 = 400 \neq -80$. That rules out (D).
5. Only (A) has both rules: $X(i) = X(i-1) + I(i)$ and $Y(i) = Y(i-1)\,I(i)$ for $i > 0$.

KEY IDEA

Test each candidate rule on the first step ($i = 1$), then confirm the survivor on every later column. X grows by adding the current input and Y grows by multiplying by the current input. Both use $I(i)$, not the lagged $I(i-1)$.

WATCH OUT FOR

Checking only one column, or only one of the two outputs. Option (D) has the right rule for X, so it looks correct until you work out $Y(1) = Y(0)\,I(0) = 400$, which is not -80. A student who checks only $i = 1$ against the wrong row can also be fooled, because $X(0) = Y(0) = I(0) = 20$ all start from the same value.

Q.9 MCQ · 2 MARKS

General Aptitude › Geometry

Q.9	In the given figure, PQRS is a square of side 2 cm and PLMN is a rectangle. The corner L of the rectangle is on the side QR. Side MN of the rectangle passes through the corner S of the square. What is the area (in cm^2) of the rectangle PLMN? Note: The figure shown is representative.
	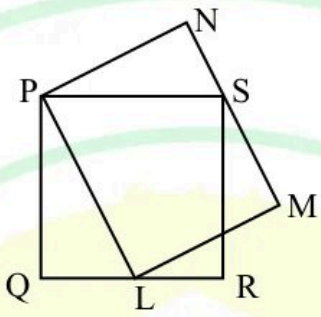
(A)	$2\sqrt{2}$
(B)	2
(C)	8
(D)	4

Official answer: **D**

SOLUTION

1. Join S to L and look at $\triangle PLS$. Both the rectangle and the square can be tied to the area of this one triangle.

2. **Using the rectangle:** take PL as the base. S lies on MN. In a rectangle $MN \parallel PL$, and the distance between these two lines is LM, because $LM \perp PL$. So the height from S to PL is LM, and
$$\text{area}(\triangle PLS) = \tfrac{1}{2}\, PL \cdot LM = \tfrac{1}{2}\,\text{area}(PLMN).$$
(A triangle standing on one side of a parallelogram, with its apex on the opposite side, has half the parallelogram's area.)
3. **Using the square:** take $PS = 2\ \text{cm}$ as the base. L lies on QR, and $QR \parallel PS$ at a distance of one side, $2\ \text{cm}$. So the height from L to PS is $2\ \text{cm}$, and
$$\text{area}(\triangle PLS) = \tfrac{1}{2} \times 2 \times 2 = 2\ \text{cm}^2.$$
4. Setting the two expressions equal gives $\tfrac{1}{2}\,\text{area}(PLMN) = 2$, so
$$\text{area}(PLMN) = 4\ \text{cm}^2,$$
wherever L sits on QR.
5. **Check with coordinates:** put $Q = (0,0)$, $R = (2,0)$, $S = (2,2)$, $P = (0,2)$ and $L = (t,0)$. Then $PL = \sqrt{t^2+4}$. The line PL is $2x + t(y-2) = 0$ (both P and L satisfy it), and the distance from $S = (2,2)$ to it is $\dfrac{|4|}{\sqrt{t^2+4}} = LM$. So the area is $PL \cdot LM = \sqrt{t^2+4} \cdot \dfrac{4}{\sqrt{t^2+4}} = 4\ \text{cm}^2$ for every t. The answer is option (D).

KEY IDEA

Triangle PLS is half of the rectangle, because it stands on side PL and its apex S lies on the opposite side MN. It is also half of the square, because it stands on side PS and its apex L lies on the opposite side QR. So the rectangle and the square have the same area, 2 × 2 = 4 cm², wherever L lies on QR.

WATCH OUT FOR

Three slips are common. (1) Measuring the figure, or assuming L is exactly the midpoint of QR, and then working out PL and LM with Pythagoras. That is slow, and a rounding slip leads to 2√2 or 8. (2) Taking triangle PLS as the whole rectangle instead of half of it, which gives 2 (option B). (3) Doubling twice and getting 8 (option C). The note says the figure is only representative: the area does not depend on where L sits.

Q.10 MCQ · 2 MARKS

General Aptitude › Reasoning

Q.10	The diagram below shows a river system consisting of 7 segments, marked P, Q, R, S, T, U, and V. It splits the land into 5 zones, marked Z1, Z2, Z3, Z4, and Z5. We need to connect these zones using the least number of bridges. Out of the following options, which one is correct? Note: The figure shown is representative.
	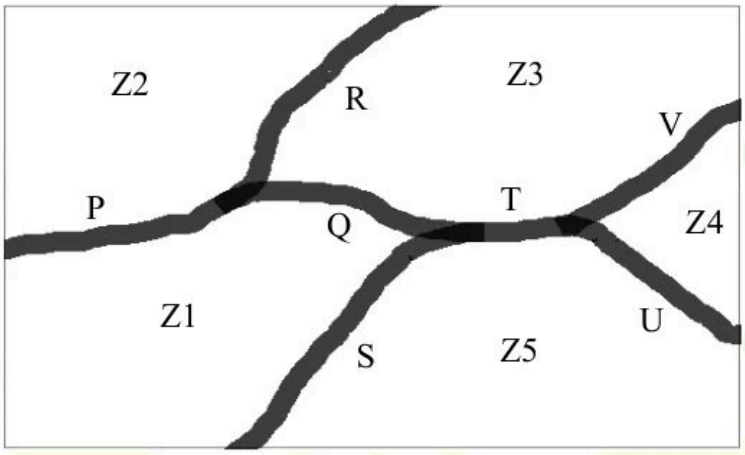
(A)	Bridges on P, Q, and T
(B)	Bridges on P, Q, S, and T
(C)	Bridges on Q, R, T, and V
(D)	Bridges on P, Q, S, U, and V

Official answer: **C**

SOLUTION

1. Read off which two zones each river segment separates. A bridge on a segment joins exactly those two zones: P: Z1–Z2, R: Z2–Z3, Q: Z1–Z3, S: Z1–Z5, T: Z3–Z5, V: Z3–Z4, U: Z4–Z5.
2. Model the land as a graph. The zones are vertices and the bridges are edges, so there are 5 vertices and 7 possible edges.
3. Minimum count: joining n vertices takes at least $n-1$ edges, and exactly $n-1$ is enough only when those edges form no cycle (a spanning tree). Here that is $5-1=4$ bridges.
4. (A) P, Q, T has only 3 bridges, fewer than 4, so it cannot connect all 5 zones. It joins Z1, Z2, Z3 and Z5 and leaves Z4 isolated. Rejected.

5. (B) P (Z1–Z2), Q (Z1–Z3), S (Z1–Z5), T (Z3–Z5). Q, S and T form the cycle Z1–Z3–Z5–Z1, so one bridge is wasted, and no chosen bridge touches Z4, which stays cut off. Rejected.
6. (D) P (Z1–Z2), Q (Z1–Z3), S (Z1–Z5), U (Z4–Z5), V (Z3–Z4). This does connect every zone, but it uses 5 bridges, and 5 edges on 5 vertices must contain a cycle (here Z1–Z3–Z4–Z5–Z1). Since 4 bridges are enough, it is not the least number. Rejected.
7. (C) Q (Z1–Z3), R (Z2–Z3), T (Z3–Z5), V (Z3–Z4). Every bridge has Z3 at one end and reaches one of the other four zones, so all 5 zones are connected with 4 bridges and no cycle. That is a spanning tree, which uses the minimum of 4.
8. Hence option (C) connects all the zones with the least number of bridges.

KEY IDEA

Treat the zones as vertices and the bridges as edges. Joining n zones with the fewest bridges means a spanning tree: exactly $n - 1$ bridges that reach every zone and form no cycle. For 5 zones that is 4 bridges, so check every option for all three conditions: the count, reaching every zone, and having no cycle.

WATCH OUT FOR

Choosing (B) because it has the right number of bridges (4) without checking that it reaches Z4. Q, S and T form a loop, so one bridge is wasted. The other trap is choosing (D) because it does connect every zone, even though it uses 5 bridges when 4 are enough.

Instrumentation Engineering Q.11 to Q.65

Q.11 MCQ · 1 MARK

Engineering Mathematics › Linear algebra

A $2n \times 2n$ matrix $A = [a_{ij}]$ has its elements as

$$a_{ij} = \begin{cases} \beta & \text{if } (i+j) \text{ is odd,} \\ -\beta & \text{if } (i+j) \text{ is even,} \end{cases}$$

where n is any integer greater than 2 and β is any non-zero real number. The rank of A is

(A) 1

(B) 2

(C) n

(D) $2n$

Official answer: **A**

SOLUTION

1. Write the entry rule as one formula. $(-1)^{i+j}$ is $+1$ when $i+j$ is even and -1 when it is odd, so $a_{ij} = -\beta(-1)^{i+j} = -\beta\,(-1)^i(-1)^j$. Check: for $i+j$ even this gives $-\beta$, for $i+j$ odd it gives β, as printed.
2. Read that as an outer product. Let $u = \begin{bmatrix} -1 & 1 & -1 & \cdots & 1 \end{bmatrix}^T$ with $u_i = (-1)^i$ for $i = 1, \ldots, 2n$. Then $a_{ij} = -\beta\, u_i u_j$, that is, $A = -\beta\, uu^T$.
3. Check the first rows. Row 1 is $\begin{bmatrix} -\beta & \beta & -\beta & \cdots & \beta \end{bmatrix}$ and row 2 is $\begin{bmatrix} \beta & -\beta & \beta & \cdots & -\beta \end{bmatrix}$, so $R_2 = -R_1$. In general $a_{ij}/a_{1j} = (-1)^i/(-1)^1 = (-1)^{i+1}$, so $R_i = (-1)^{i+1} R_1$.
4. Row-reduce with $R_i \to R_i - (-1)^{i+1} R_1$ for $i = 2, \ldots, 2n$. Every row below the first becomes zero.
5. One non-zero row is left, and it is non-zero because $\beta \neq 0$. So $\operatorname{rank}(A) = 1$ for every $n > 2$ and every non-zero β. This is option (A).

KEY IDEA

Each entry factors as $a_{ij} = -\beta\,(-1)^i(-1)^j$, so $A = -\beta\, uu^T$ with $u_i = (-1)^i$. A non-zero matrix that is a scalar times an outer product uu^T has rank exactly 1: every row is a multiple (± 1) of the first row.

WATCH OUT FOR

Treating the checkerboard of β and $-\beta$ as two independent row types (odd rows and even rows) and answering 2. An even row is exactly -1 times an odd row, so the two types are dependent. The other trap is thinking the size $2n$ or the condition $n > 2$ affects the answer. Neither does: the rank is 1 for any size and any non-zero β.

Q.12 MCQ · 1 MARK

Engineering Mathematics › Differential equations

The solution of the differential equation $\dfrac{dy}{dx} = 9\dfrac{x}{y}$ represents

(A) a hyperbola

(B) a parabola

(C) an ellipse

(D) a circle

Official answer: **A**

SOLUTION

1. The variables separate. Multiply both sides by $y\,dx$ (with $y \neq 0$) to get $y\,dy = 9x\,dx$.
2. Integrate both sides: $\displaystyle\int y\,dy = \int 9x\,dx \;\Rightarrow\; \frac{y^2}{2} = \frac{9x^2}{2} + C_1$.

3. Multiply by 2 and rearrange:
$$y^2 - 9x^2 = C, \qquad C = 2C_1.$$
4. Identify the conic. The squares x^2 and y^2 have opposite signs, so the curve is a hyperbola. The discriminant test for $Ax^2 + Bxy + Cy^2 + \cdots = 0$ gives the same answer: here $A = -9$, $B = 0$, $C = 1$, so $B^2 - 4AC = 36 > 0$, which means a hyperbola. For $C > 0$ the curve is $\frac{y^2}{C} - \frac{x^2}{C/9} = 1$, which opens along the y-axis. For $C < 0$ it is $\frac{x^2}{|C|/9} - \frac{y^2}{|C|} = 1$, which opens along the x-axis. In both cases the asymptotes are $y = \pm 3x$. The case $C = 0$ is the degenerate hyperbola made of that pair of lines.
5. Rule out the other options. A circle needs equal coefficients with the same sign, as in $x^2 + y^2 = r^2$. An ellipse needs both squares to have the same sign. A parabola has only one of the variables squared. So the answer is (A), a hyperbola.

KEY IDEA

Separate the variables and integrate, then read the conic from the signs of the squared terms. The same signs give an ellipse (a circle if the coefficients are also equal). Opposite signs give a hyperbola. Only one squared variable gives a parabola.

WATCH OUT FOR

Losing or flipping the sign. $\frac{dy}{dx} = -9\frac{x}{y}$ gives $y^2 + 9x^2 = C$, which is an ellipse, and students who mix up the two equations pick (C). Some also see only the x^2 and y^2 terms and answer "circle" without checking the signs and coefficients.

Q.13 MCQ · 1 MARK

Sensors and Industrial Instrumentation › Sensing principles

The working of the hand-held metal detector most widely used by security personnel for human frisking is based on the principle of

(A) change in reluctance of an iron core in presence of a metallic object

(B) change in conductance of an iron core in presence of a metallic object

(C) electric field induced by a metallic object

(D) eddy current generation in a metallic object

Official answer: **D**

SOLUTION

1. A hand-held frisking detector has a transmitter coil carrying an alternating or pulsed current, which produces a time-varying magnetic field.
2. When a metallic object enters this field, the changing flux induces circulating **eddy currents** in the metal (Faraday's law, $e = -\frac{d\phi}{dt}$).
3. The eddy currents set up their own magnetic field, which opposes the original one (Lenz's law). This changes the coil's inductance and losses, or the signal in a receiver coil.
4. The electronics detect this change in coil impedance, oscillator frequency or received signal, and sound the alarm.
5. Options A and B need an iron core whose reluctance or conductance changes. A hand-held frisking unit has no such core, and a non-ferrous metal such as aluminium or brass would not change a core's reluctance anyway, so these are wrong.
6. Option C is wrong because the detector does not sense an electric field produced by the object. It works through a magnetic field that the object reacts to.
7. Hence the principle is eddy current generation in the metallic object: option D.

KEY IDEA

A coil's alternating magnetic field induces eddy currents in any conductor that comes near. Those currents produce an opposing field, which changes the coil's impedance or the received signal, and this change is what the detector senses.

WATCH OUT FOR

Picking a variable-reluctance answer (A or B) because it sounds like an inductive sensor. Reluctance change needs a ferromagnetic core in the sensor and responds to ferrous material. Metal detectors work on eddy currents, which form in any conductor.

Q.14 MCQ · 1 MARK

Sensors and Industrial Instrumentation › Motion & force

Q.14	The primary coil of a linear variable differential transformer (LVDT) is supplied with AC voltage as shown in the figure. The secondary coils are connected in series opposition and the output is measured using a true RMS voltmeter. The displacement x of the core is indicated in mm on a linear scale. At the null position $x = 0$, the voltmeter reads 0 V. If the voltmeter reads 0.2 V for a displacement of $x = +2$ mm, then for a displacement of $x = -3$ mm, the voltmeter reading, in V, is
	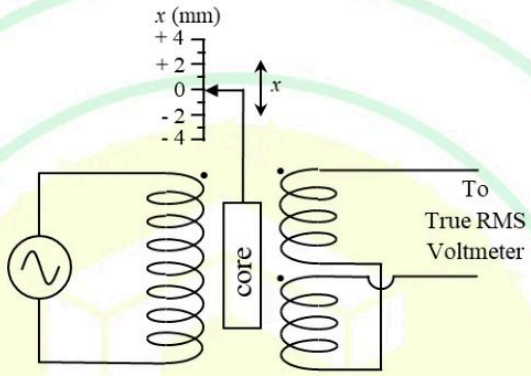
(A)	− 0.3
(B)	− 0.1
(C)	0.3
(D)	0.5

Official answer: **C**

SOLUTION

1. The secondary coils are in series opposition, so the net output is $v_o = v_{s1} - v_{s2}$. At null ($x = 0$) the two induced voltages are equal and $v_o = 0$ V.
2. Within the linear range the output amplitude is proportional to the core displacement from null: $|V_o| = k\,|x|$.
3. From the given reading, $k = \dfrac{0.2\ \text{V}}{2\ \text{mm}} = 0.1\ \text{V/mm}$.

4. For $x = -3\ \text{mm}$ the amplitude is $|V_o| = 0.1\ \text{V/mm} \times 3\ \text{mm} = 0.3\ \text{V}$.
5. Moving the core to the other side of null reverses the phase of the output by 180°. The sign of the displacement is carried only by this phase.
6. A true RMS voltmeter reads the RMS value of the waveform. This value is never negative and does not show the phase. So it reads $+0.3\ \text{V}$, not $-0.3\ \text{V}$, and option (C) is correct.

KEY IDEA

An LVDT output amplitude is proportional to the core's distance from null. The side of null shows up only as a 180 degree phase change. A true RMS voltmeter cannot show phase, so it reads the magnitude, which is always positive.

WATCH OUT FOR

Treating the output as a signed DC-like quantity and picking -0.3 V for a negative displacement. Another slip is using only the magnitude scaling and choosing -0.1 V or 0.5 V by adding or subtracting readings.

Q.15 MCQ · 1 MARK

Sensors and Industrial Instrumentation › Sensing principles

Q.15	In the force transducer shown in Figure (a), four identical strain gauges S1, S2, S3, and S4 are mounted on a cantilever at equal distance from its base. S1 and S2 are mounted on the top surface and S3 and S4 are mounted on the bottom surface, as shown in the Figure (a). These strain gauges are to be connected to form a Wheatstone bridge consisting of four arms A, B, C, and D, as shown in the Figure (b). From the following options, the correct order to maximize the measurement sensitivity is
	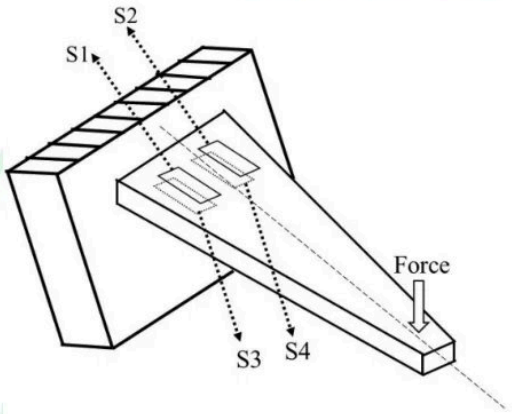 Figure (a) 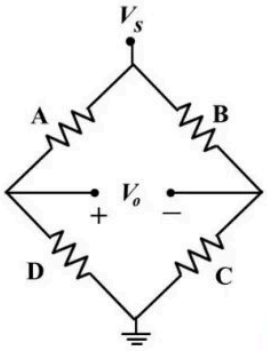 Figure (b)
(A)	A → S1, B → S2, C → S4, D → S3
(B)	A → S1, B → S4, C → S3, D → S2
(C)	A → S1, B → S2, C → S3, D → S4
(D)	A → S1, B → S4, C → S2, D → S3

Official answer: **D**

SOLUTION

1. A downward force on the free end bends the cantilever so the top surface is in tension and the bottom surface is in compression. The gauges are identical and at equal distance from the base, so the strain magnitude is the same: S1 and S2 have $\Delta R/R = +G\varepsilon$, and S3 and S4 have $\Delta R/R = -G\varepsilon$.
2. From Figure (b), V_s is at the top node and ground at the bottom node, with A top-left, B top-right, C bottom-right and D bottom-left. The left output node is the A-D junction and the right output node is the B-C junction, so

$$V_o = V_s \left[\frac{D}{A+D} - \frac{C}{B+C} \right].$$

3. For small changes from a common nominal value R_0 in each arm:
$$\Delta V_o \approx \frac{V_s}{4} \left[\frac{\Delta D}{R_0} + \frac{\Delta B}{R_0} - \frac{\Delta A}{R_0} - \frac{\Delta C}{R_0} \right].$$
4. The output is largest when ΔB and ΔD have one sign and ΔA and ΔC have the opposite sign. Then all four terms add and $\Delta V_o = V_s\, G\varepsilon$, which is 4 times the output of one active gauge.
5. So the arms A and C (opposite arms) must be given gauges of the same strain sign, B and D (the other opposite pair) must be given gauges of the other sign, and the two pairs must be opposite to each other.
6. (A) A on S1 (+), C on S4 (−): the A and C terms cancel. B on S2 (+), D on S3 (−): the B and D terms cancel. $\Delta V_o = 0$.
7. (B) A on S1 (+), C on S3 (−): cancel. B on S4 (−), D on S2 (+): cancel. $\Delta V_o = 0$.
8. (C) A on S1 (+), C on S3 (−): cancel. B on S2 (+), D on S4 (−): cancel. $\Delta V_o = 0$.
9. (D) A on S1 (+) and C on S2 (+) have the same sign. B on S4 (−) and D on S3 (−) have the opposite sign. Every term adds: $\Delta V_o = V_s\, G\varepsilon$, the maximum possible.
10. Hence the answer is (D).

KEY IDEA

In a Wheatstone bridge, $V_o \propto \Delta D + \Delta B - \Delta A - \Delta C$. Put the tension gauges (S1, S2) in one pair of opposite arms (A, C) and the compression gauges (S3, S4) in the other pair (B, D). All four arms then add, which gives 4 times the single-gauge sensitivity.

WATCH OUT FOR

Mixing up which arms are adjacent and which are opposite. Putting tension gauges in adjacent arms makes their effects cancel. Arms A and C are opposite and arms B and D are opposite, so the signs of A and C must agree and the signs of B and D must agree.

Q.16 MCQ · 1 MARK

Signals and Systems › Signals basics

Let a continuous-time signal be $x(t) = e^{j9t} + e^{j5t}$, where $j = \sqrt{-1}$ and t is in seconds. The fundamental period of magnitude of $x(t)$, in seconds, is

(A) π
(B) $\frac{\pi}{2}$
(C) $\frac{\pi}{5}$
(D) $\frac{\pi}{9}$

Official answer: **B**

SOLUTION

1. Factor out the mean frequency e^{j7t} (half of $9+5$):
$$x(t) = e^{j7t}\left(e^{j2t} + e^{-j2t}\right) = 2\cos(2t)\, e^{j7t}$$
2. The magnitude of a product is the product of the magnitudes, and $|e^{j7t}| = 1$, so
$$|x(t)| = 2\,|\cos(2t)|$$
3. Check with $|x|^2 = x\,x^*$:
$$|x(t)|^2 = \left(e^{j9t} + e^{j5t}\right)\left(e^{-j9t} + e^{-j5t}\right) = 2 + e^{j4t} + e^{-j4t} = 2 + 2\cos(4t) = 4\cos^2(2t)$$
This agrees with step 2.
4. $T = \frac{\pi}{2}$ is a period:
$$\left|\cos\left(2\left(t + \tfrac{\pi}{2}\right)\right)\right| = |\cos(2t + \pi)| = |-\cos(2t)| = |\cos(2t)|$$

In words, $\cos(2t)$ has period $\frac{2\pi}{2} = \pi$, and taking the absolute value flips the negative half-cycle up, so $|\cos(2t)|$ repeats after half of that.

5. No shorter period exists: $|\cos(2t)| = 1$ at $t = 0$, so for any period T it must also equal 1 at $t = T$. But $|\cos(2t)| = 1$ only at $t = \frac{k\pi}{2}$, so the smallest positive period is $\frac{\pi}{2}$. The fundamental period of $|x(t)|$ is $\frac{\pi}{2}$ s, option (B).

KEY IDEA

Factor out the average frequency: $e^{j\omega_1 t} + e^{j\omega_2 t} = 2\cos\left(\frac{\omega_1 - \omega_2}{2}t\right) e^{j\frac{\omega_1+\omega_2}{2}t}$. The unit-magnitude phasor has no effect on $|x(t)|$, so the magnitude is $2|\cos(2t)|$. Taking the absolute value halves the period of the cosine.

WATCH OUT FOR

There are three common slips. One is to give the period of $x(t)$ itself: $\gcd(9, 5) = 1$ rad/s gives 2π, which is not an option, and students then guess. Another is to stop at the period of $\cos(2t)$, which is π (option A), and forget that the absolute value halves it. The third is to read the answer off one exponent and pick $\pi/9$ or $\pi/5$.

Q.17 MCQ · 1 MARK

Digital Electronics › Combinational

Q.17	The minimized expression of the Boolean function Y(P, Q, R) implemented by the multiplexer (MUX) circuit shown in the figure is
	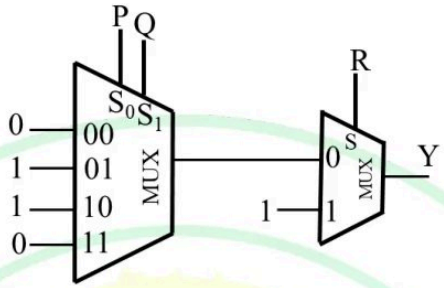
(A)	$Y = R + (P \oplus Q)$
(B)	$Y = R\,(P \oplus Q)$
(C)	$Y = R + (\overline{P \oplus Q})$
(D)	$Y = R \oplus (P \oplus Q)$

Official answer: **A**

SOLUTION

1. **First MUX (4:1).** Its output is $F = \sum m_i I_i$, where m_i is the minterm of the select word. The select word is $S_0S_1 = PQ$, and the data inputs are $I_{00} = 0,\ I_{01} = 1,\ I_{10} = 1,\ I_{11} = 0$.
2. F is 1 only for $PQ = 01$ and $PQ = 10$, so $F = \overline{P}Q + P\overline{Q} = P \oplus Q$. Here $\overline{\ }$ means complement.
3. The result does not depend on which select line is the MSB. The two 1-inputs (01 and 10) are mirror images of each other, so swapping S_0 and S_1 still gives $P \oplus Q$.

4. **Second MUX (2:1).** Its output is $Y = \overline{S}\, I_0 + S\, I_1$. With $S = R$, $I_0 = F$ and $I_1 = 1$:
$$Y = \overline{R}\,(P \oplus Q) + R \cdot 1$$
5. **Simplify with $A + \overline{A}B = A + B$:**
$$Y = R + \overline{R}\,(P \oplus Q) = R + (P \oplus Q)$$
6. **Check by cases.** When $R = 1$, the second MUX passes the constant 1, so $Y = 1$. When $R = 0$, it passes the first MUX's output, so $Y = P \oplus Q$. Option (A) gives the same value in both cases. (B) gives $Y = 0$ when $R = 0$. (C) uses $\overline{P \oplus Q}$ when $R = 0$. (D) gives $Y = \overline{P \oplus Q}$ when $R = 1$. The answer is (A).

KEY IDEA

Treat the MUXes one at a time. The 4:1 MUX with inputs 0, 1, 1, 0 gives $P \oplus Q$. The 2:1 MUX, selected by R, passes that result when $R = 0$ and a constant 1 when $R = 1$. That is the OR of R with $P \oplus Q$, because $R + \overline{R}X = R + X$.

WATCH OUT FOR

Writing the 2:1 MUX output as $R\,(P \oplus Q)$, which is option (B). That swaps the roles of the two data inputs. The first MUX's output is on input 0, which is chosen when $R = 0$, and the constant 1 is on input 1. A second mistake is reading the 0, 1, 1, 0 pattern as XNOR, which leads to option (C).

Q.18 MCQ · 1 MARK

Digital Electronics › Number systems

The 4-bit signed 2's complement form of $(5)_{10} + (5)_{10}$ is

(A) $(-6)_{10}$
(B) $(-7)_{10}$
(C) $(-5)_{10}$
(D) $(-8)_{10}$

Official answer: **A**

SOLUTION

1. Write each operand in 4-bit 2's complement: $(5)_{10} = (0101)_2$. A 4-bit 2's complement number ranges from -2^3 to $2^3 - 1$, that is, from -8 to $+7$.
2. Add in binary and keep only 4 bits:
$$\begin{array}{r} 0101 \\ +\ 0101 \\ \hline 1010 \end{array}$$
There is no carry out of the MSB, so the 4-bit result is $(1010)_2$.
3. Overflow check: both operands are positive (sign bit 0), but the result has sign bit 1, so the addition has overflowed. The true sum, $+10$, lies outside the range -8 to $+7$.
4. Read $(1010)_2$ as a signed 2's complement number. The MSB has weight -2^3:
$$-8 + 0 \cdot 4 + 1 \cdot 2 + 0 \cdot 1 = -6$$
5. Cross-check by taking the 2's complement of 1010: inverting every bit gives 0101, and adding 1 gives $0110 = 6$. So 1010 stands for -6.
6. The 4-bit register therefore holds $(-6)_{10}$, which is option (A).

KEY IDEA

An n-bit 2's complement register can hold only values from -2^{n-1} to $2^{n-1}-1$. When two positive numbers add up to more than $2^{n-1}-1$, the sum wraps around. The stored pattern is the true sum minus 2^n, here $10-16=-6$. You can spot the overflow because two operands with sign bit 0 give a result with sign bit 1.

WATCH OUT FOR

Reading 1010 as unsigned and answering $+10$, which is not an option, or treating it as sign-magnitude and getting -2. A related slip is choosing -8 because it is the most negative 4-bit value. Some students also flip the bits and forget to add 1, getting $0101=5$ and choosing -5 (C). The MSB carries weight -8, so $1010=-8+2=-6$.

Q.19 MCQ · 1 MARK

Electromagnetics › Electrostatics

An infinite sheet of uniform charge $\rho_s = 10\ \mathrm{C/m^2}$ is placed on $z=0$ plane. The medium surrounding the sheet has a relative permittivity of 10. The electric flux density, in $\mathrm{C/m^2}$, at a point $P(0,0,5)$, is

Note: $\hat{a}$, $\hat{b}$, and $\hat{c}$ are unit vectors along the x, y, and z directions, respectively.

(A) $5\,\hat{c}$

(B) $0.25\,\hat{c}$

(C) $10\,\hat{c}$

(D) $0.5\,\hat{c}$

Official answer: **A**

SOLUTION

1. **Gauss's law over a pillbox.** Take a cylindrical pillbox of face area A that straddles the sheet. By symmetry $\mathbf{D}$ is normal to the sheet and, because the sheet is positively charged, points away from it on both sides. $\mathbf{D}$ runs parallel to the curved wall, so that wall carries no flux and only the two flat faces count:
$$\oint \mathbf{D}\cdot d\mathbf{S} = DA + DA = Q_{enc} = \rho_s A$$
2. **Field of an infinite sheet.** So $D=\dfrac{\rho_s}{2}$. It is the same at every distance from the sheet, so the height $z=5$ of the point P does not change the magnitude.
3. **The permittivity does not appear.** Gauss's law written for $\mathbf{D}$ uses only the free charge, so $\mathbf{D}$ does not depend on ϵ_r. Only $\mathbf{E}$ depends on the medium: $\mathbf{E}=\dfrac{\rho_s}{2\epsilon_0\epsilon_r}\hat{a}_n$, where $\epsilon_0 = 8.854\times10^{-12}\ \mathrm{F/m}$. Multiplying back, $\mathbf{D}=\epsilon_0\epsilon_r\mathbf{E}=\dfrac{\rho_s}{2}\hat{a}_n$, and the $\epsilon_r=10$ cancels.
4. **Magnitude.** $D=\dfrac{10}{2}=5\ \mathrm{C/m^2}$.
5. **Direction.** $P(0,0,5)$ is on the $+z$ side of the sheet, and the sheet is positively charged, so $\mathbf{D}$ at P points away from the sheet, along $+z$, which is $\hat{c}$. Therefore
$$\mathbf{D} = 5\,\hat{c}\ \mathrm{C/m^2}$$
This is option (A).

KEY IDEA

Gauss's law for $\mathbf{D}$ uses only the free charge enclosed. For an infinite sheet, $\mathbf{D}=\dfrac{\rho_s}{2}\hat{a}_n$ whatever the medium and whatever the distance from the sheet. The permittivity changes only $\mathbf{E}=\mathbf{D}/(\epsilon_0\epsilon_r)$.

WATCH OUT FOR

Dividing by ϵ_r to get $0.5\,\hat{c}$ (option D), or by $2\epsilon_r$ again to get $0.25\,\hat{c}$ (option B). Both mix up $\mathbf{D}$ with $\mathbf{E}$, and only $\mathbf{E}$ depends on the medium. A third mistake is to forget that the flux leaves through both faces of the pillbox and write $D=\rho_s=10$ (option C). $D=\rho_s$ is the result for a conductor surface, where the field on the inside is zero.

Q.20 MCQ · 1 MARK

Analog Electronics › Op-amps

Q.20	For the ideal opamp based circuit shown in the figure, the ratio $\frac{V}{I}$ is
	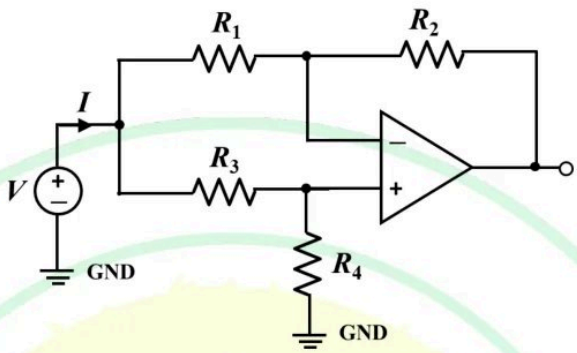
(A)	$\left(\frac{R_3+R_4}{R_1+R_3}\right)R_1$
(B)	$\left(\frac{R_2+R_4}{R_1+R_3}\right)R_3$
(C)	R_1+R_3
(D)	R_3+R_4

Official answer: **A**

SOLUTION

1. **Assumptions.** Ideal op-amp: no current flows into either input terminal. R_2 connects the output back to the inverting input, so there is negative feedback, and the two inputs sit at the same voltage (virtual short): $V_- = V_+$.
2. **Lower branch (voltage divider).** The + input draws no current, so R_3 and R_4 carry the same current:

$$I_3 = \frac{V}{R_3+R_4}, \qquad V_+ = \frac{R_4}{R_3+R_4}V$$

3. **Virtual short.** $V_- = V_+ = \dfrac{R_4}{R_3 + R_4}\,V$.
4. **Upper branch.** Only the voltage across R_1 sets the current through it:
$$I_1 = \frac{V - V_-}{R_1} = \frac{V}{R_1}\left(1 - \frac{R_4}{R_3 + R_4}\right) = \frac{R_3\,V}{R_1(R_3 + R_4)}$$
No current enters the − input, so all of I_1 flows on through R_2 into the op-amp output. R_2 only sets the output voltage and has no effect on I.
5. **KCL at the input node.**
$$I = I_1 + I_3 = \frac{V}{R_3 + R_4}\left(\frac{R_3}{R_1} + 1\right) = \frac{V\,(R_1 + R_3)}{R_1(R_3 + R_4)}$$
6. **Result.**
$$\frac{V}{I} = \left(\frac{R_3 + R_4}{R_1 + R_3}\right) R_1$$
This is option (A).
7. **Check.** Put $R_4 = 0$. Then $V_+ = V_- = 0$, both R_1 and R_3 end at (virtual) ground, and the source sees $R_1 \parallel R_3 = \dfrac{R_1 R_3}{R_1 + R_3}$. The formula gives $\left(\dfrac{R_3}{R_1 + R_3}\right) R_1$, the same value.

KEY IDEA

The source feeds two branches. The lower one (R_3, R_4) is a plain divider because the + input draws no current, and it fixes V_+. The virtual short copies V_+ onto the − input, so the current in R_1 is set by $V - V_+$ alone. I is the sum of the two branch currents, and R_2 never enters it.

WATCH OUT FOR

Two common slips. The first is treating the − input as virtual ground (true only when the + input is grounded), which gives $I_1 = V/R_1$ and the wrong answer. The second is letting R_2 into V/I (as option (B) does), when all R_2 does is set the output voltage. Only the lower branch loads the source as a simple series resistance $R_3 + R_4$, so option (D) misses the current through R_1.

Q.21 MCQ · 1 MARK

Electrical and Electronic Measurements › V, I, power & energy

Q.21	In a single-phase AC circuit, the power consumed by load resistance R_L for an excitation V_S is measured using a wattmeter. The same wattmeter is connected in two different topologies, Topology-A and Topology-B, as shown in the figure. Different branch currents and voltage drops are also marked in the figure. Among the following options, the condition that ensures low error in the wattmeter reading for both the topologies is
	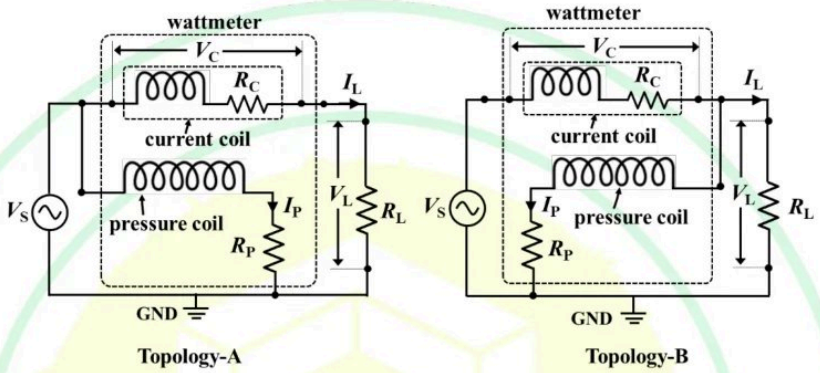
(A)	$V_L \gg V_C$ for Topology-A and $I_L \gg I_P$ for Topology-B
(B)	$V_L \gg V_C$ for Topology-A and $I_L \ll I_P$ for Topology-B
(C)	$V_L \ll V_C$ for Topology-A and $I_L \ll I_P$ for Topology-B
(D)	$V_L \ll V_C$ for Topology-A and $I_L \gg I_P$ for Topology-B

Official answer: **A**

SOLUTION

1. **Read the two connections.** In Topology-A the pressure-coil branch is tapped on the top wire on the source side of the current coil. In Topology-B it is tapped on the load side, between the current coil and R_L. A wattmeter reads $V_p I_c \cos\theta$, where V_p is the voltage across its pressure-coil circuit, I_c is the current through its current coil and θ is the angle between them. In phasor form that is $W = \mathrm{Re}\,(V_p I_c^*)$. This assumes the pressure-coil circuit is practically resistive (R_P much larger than the pressure-coil

reactance), which is how a wattmeter is designed. The load R_L is a resistor, so V_L and I_L are in phase and the true load power is $P_L = V_L I_L$.

2. **Topology-A (pressure coil on the source side).** The pressure-coil current I_P is drawn straight from the source and never passes through the current coil, so $I_c = I_L$. The pressure coil sees the load voltage plus the current-coil drop: $V_p = V_S = V_L + V_C$ as phasors. Here $V_C = I_L\,(R_C + jX_C)$, and X_C is the current coil's own reactance, since the coil is drawn as an inductor.
3. The wattmeter reads
$$\begin{aligned} W_A &= \mathrm{Re}\left[(V_L + V_C)\, I_L^*\right] \\ &= V_L I_L + \mathrm{Re}\left[(R_C + jX_C)\, I_L I_L^*\right] \\ &= P_L + I_L^2 R_C \end{aligned}$$
The extra term is the copper loss of the current coil. Its reactance adds no real power.
4. Fractional error for Topology-A:
$$\frac{W_A - P_L}{P_L} = \frac{I_L^2 R_C}{V_L I_L} = \frac{I_L R_C}{V_L} \le \frac{|V_C|}{V_L}$$
because $|V_C| = I_L\sqrt{R_C^2 + X_C^2} \ge I_L R_C$. When the coil reactance is negligible this becomes $V_C/V_L = R_C/R_L$. So the error is guaranteed small when $V_L \gg V_C$, which means a high-resistance, low-current load.
5. **Topology-B (pressure coil on the load side).** The pressure coil sees exactly the load voltage, $V_p = V_L$. The current coil carries the load current plus the pressure-coil current, $I_c = I_L + I_P$. Here $I_P = V_L/R_P$ is in phase with V_L, because the pressure-coil circuit is resistive.
6. The wattmeter reads
$$\begin{aligned} W_B &= \mathrm{Re}\left[V_L\,(I_L + I_P)^*\right] \\ &= V_L I_L + V_L I_P \\ &= P_L + \frac{V_L^2}{R_P} \end{aligned}$$
The extra term is the power lost in the pressure-coil circuit.
7. Fractional error for Topology-B:
$$\frac{W_B - P_L}{P_L} = \frac{V_L I_P}{V_L I_L} = \frac{I_P}{I_L} = \frac{R_L}{R_P}$$
This is small only when $I_L \gg I_P$, which means a low-resistance, high-current load.
8. **Rule out the other options.** In Topology-B, $I_L \ll I_P$ makes the error I_P/I_L far above 100%, so options (B) and (C) fail. In Topology-A, $V_L \ll V_C$ does not guarantee a low error: for a current coil whose drop is mainly resistive, the error $I_L R_C/V_L \approx V_C/V_L$ is then far above 100%. That rules out options (C) and (D).
9. Only option (A) guarantees a low error in both topologies: $V_L \gg V_C$ for Topology-A and $I_L \gg I_P$ for Topology-B.

KEY IDEA

A wattmeter always reads a little more than the load power, because it also counts the loss in one of its own coils. With the pressure coil on the source side (Topology-A) it adds the current coil's copper loss $I_L^2 R_C$. The relative error is $I_L R_C / V_L$, which is small when the current-coil drop is small next to the load voltage ($V_L \gg V_C$). With the pressure coil on the load side (Topology-B) it adds the pressure-coil loss V_L^2 / R_P. The relative error is I_P / I_L, which is small when the load current is much larger than the pressure-coil current ($I_L \gg I_P$). Topology-A suits high-resistance, low-current loads, and Topology-B suits low-resistance, high-current loads.

WATCH OUT FOR

Mixing up which coil's loss belongs to which connection. In Topology-A the pressure-coil current is drawn directly from the source and never flows through the current coil, so I_P does not matter there. What matters is the drop V_C that adds to the voltage the pressure coil sees. In Topology-B the pressure coil sees exactly V_L, so V_C does not matter there. What matters is the current I_P that the current coil carries on top of I_L. Swapping the two gives option (D). Another error is treating the coils as pure resistors and adding their voltages as plain numbers. Only the real part $\mathrm{Re}(V_p I_c^*)$ counts, and that gives the loss term $I_L^2 R_C$ whatever the coil's reactance.

Q.22 MCQ · 1 MARK

Q.22 Match the following sensors with their most suitable applications.

Sensor		Application	
P	Rotary Variable Differential Transformer	I	Vacuum measurement
Q	Thermocouple	II	Force measurement
R	Ionization Gauge	III	Angular displacement measurement
S	Strain Gauge	IV	Temperature measurement

(A) P – II, Q – III, R – I, S – IV

(B) P – II, Q – IV, R – III, S – I

(C) P – III, Q – IV, R – II, S – I

(D) P – III, Q – IV, R – I, S – II

Official answer: **D**

SOLUTION

1. Match each sensor with the quantity its working principle measures.
2. P, the Rotary Variable Differential Transformer, is the rotary form of an LVDT. Its core turns inside the windings, and over a limited angle the output voltage is proportional to the core's angular position. So P matches III, angular displacement measurement.

3. Q, the thermocouple, works on the Seebeck effect. The emf depends on the difference between the measuring-junction and reference-junction temperatures. So Q matches IV, temperature measurement.
4. R, the ionization gauge, uses electrons to ionize the gas molecules. At very low pressure the collected ion current is proportional to the gas pressure. So R matches I, vacuum measurement.
5. S, the strain gauge, changes resistance with strain according to $G = \dfrac{\Delta R/R}{\varepsilon}$. On an elastic member such as a load cell, the strain is proportional to the applied force. So S matches II, force measurement.
6. The combination is P–III, Q–IV, R–I, S–II, which is option (D).

KEY IDEA
Match each sensor to the physical quantity its principle directly responds to. An RVDT gives angle, a thermocouple gives temperature, an ionization gauge gives low gas pressure (vacuum), and a strain gauge on an elastic member gives force.

WATCH OUT FOR
Pairing the strain gauge with vacuum, or the RVDT with force, because both are loosely thought of as mechanical sensors. A strain gauge senses strain, which becomes force only through an elastic member. An RVDT senses rotation of its core, not force.

Q.23 MCQ · 1 MARK

Electrical and Electronic Measurements › Digital instruments

A $3\frac{1}{2}$ digit digital voltmeter has a specified accuracy of $\pm(0.5\% + 1)$. If it is used to measure $10\ \text{V}$ DC voltage, the error in the measurement would be

Note: Accuracy of the digital voltmeter is expressed as $\pm$(% of reading + digit).

(A) $\pm 0.4\%$
(B) $\pm 1.5\%$
(C) $\pm 0.6\%$
(D) $\pm 1\%$

Official answer: **C**

SOLUTION

1. A $3\frac{1}{2}$ digit display has three full digits (each 0 to 9) and one leading half digit (0 or 1), so its largest reading is 1999 counts.
2. The ranges of such a meter are $1.999\ \text{V}$, $19.99\ \text{V}$, $199.9\ \text{V}$, and so on. $10\ \text{V}$ is too large for the $1.999\ \text{V}$ range, so the lowest range that can show it is $19.99\ \text{V}$. There it reads 10.00, which is 1000 counts.
3. Resolution on this range (the value of one count in the last digit):
$$1\ \text{digit} = 0.01\ \text{V}$$
4. Percentage-of-reading part:
$$0.5\% \times 10\ \text{V} = 0.05\ \text{V}$$
5. Digit part: $+1\ \text{digit} = 0.01\ \text{V}$.
6. The two parts add, because a specification gives the worst case:
$$\Delta V = \pm(0.05 + 0.01)\ \text{V} = \pm 0.06\ \text{V}$$
7. As a percentage of the reading:
$$\frac{0.06\ \text{V}}{10\ \text{V}} \times 100\% = \pm 0.6\%$$
Check in counts: 0.5% of 1000 counts is 5 counts, plus 1 count gives 6 counts out of 1000, which is 0.6%. This is option (C).

KEY IDEA

For a DVM spec of $\pm(\%\ \text{of reading} + n\ \text{digits})$, first find the range the reading sits on. On that range one digit is one count of the last displayed place. Change the digit term into volts, add it to the percentage-of-reading term, then divide by the reading. For a $3\frac{1}{2}$ digit meter, $10\ \text{V}$ sits on the $19.99\ \text{V}$ range, so $1\ \text{digit} = 0.01\ \text{V}$.

WATCH OUT FOR

There are three common mistakes. The first is to answer $\pm 0.5\%$ and forget the digit term, but that is not one of the options. The second is to add the "1" as 1%, which gives $\pm 1.5\%$ (option B). The third is to take one digit as $0.1\ \text{V}$ by assuming the wrong range, which gives $0.05 + 0.1 = 0.15\ \text{V}$, or 1.5%. The digit term has to be turned into volts using the resolution of the range actually in use, which here is $0.01\ \text{V}$ on the $19.99\ \text{V}$ range.

Q.24 MCQ · 1 MARK

Networks (Electric Circuits) › Coupled circuits

Q.24	The circuit shown in Figure (a) can be represented using its equivalent T-model as shown in Figure (b). The values of the inductances L_1, L_2, and L_3 in the equivalent T-model are
	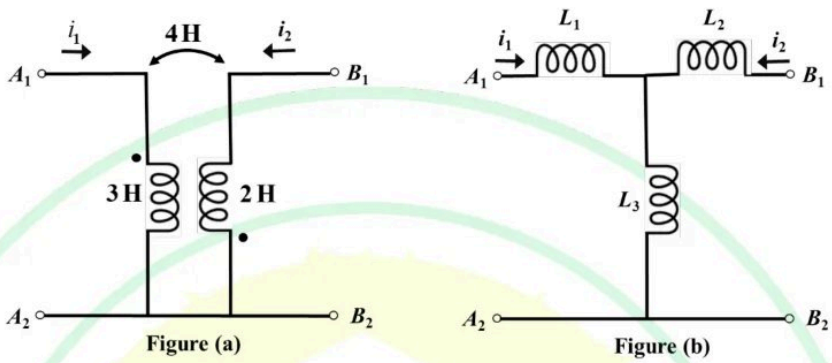
(A)	$L_1 = 7$ H, $L_2 = 6$ H, $L_3 = -4$ H
(B)	$L_1 = -1$ H, $L_2 = -2$ H, $L_3 = 4$ H
(C)	$L_1 = 3$ H, $L_2 = 2$ H, $L_3 = 9$ H
(D)	$L_1 = 1$ H, $L_2 = -2$ H, $L_3 = -4$ H

Official answer: **A**

SOLUTION

1. **Dot convention.** i_1 enters the 3 H coil at its dotted (top) end. i_2 enters the 2 H coil at its top end, which is the undotted one, because that coil's dot is at the bottom. One current enters a dot and the other does not, so every mutual voltage term carries a minus sign: it appears as $-M\dfrac{di}{dt}$ with $M = 4$ H.
2. **Terminal equations of Figure (a)**, with v_1 across A_1A_2 (positive at A_1) and v_2 across B_1B_2 (positive at B_1):

$$v_1 = 3\frac{di_1}{dt} - 4\frac{di_2}{dt}$$
$$v_2 = -4\frac{di_1}{dt} + 2\frac{di_2}{dt}$$

3. **Terminal equations of the T-model (b).** i_1 flows through L_1 and i_2 through L_2 into the middle node, so L_3 carries $i_1 + i_2$ down to the common bottom wire. KVL on each side gives
$$v_1 = (L_1 + L_3)\frac{di_1}{dt} + L_3\frac{di_2}{dt}$$
$$v_2 = L_3\frac{di_1}{dt} + (L_2 + L_3)\frac{di_2}{dt}$$
4. **Match the cross (mutual) terms:** the coefficient of $\frac{di_2}{dt}$ in v_1 (and of $\frac{di_1}{dt}$ in v_2) gives $L_3 = -4$ H.
5. **Match the self terms:** $L_1 + L_3 = 3 \Rightarrow L_1 = 3 - (-4) = 7$ H, and $L_2 + L_3 = 2 \Rightarrow L_2 = 2 - (-4) = 6$ H.
6. Therefore $L_1 = 7$ H, $L_2 = 6$ H and $L_3 = -4$ H, which is option (A). A negative inductance is normal in an equivalent circuit: the T-model only has to reproduce the terminal equations, not be built from physical parts.

KEY IDEA

A coupled pair with a common terminal is equivalent to a T of uncoupled inductors. When both terminal currents enter dotted ends (mutual terms $+M$), the arms are $L_a - M$ and $L_b - M$ and the shunt is $+M$. When one current enters a dot and the other does not (mutual terms $-M$), the arms are $L_a + M$ and $L_b + M$ and the shunt is $-M$. Here that gives $3 + 4 = 7$ H, $2 + 4 = 6$ H and -4 H.

WATCH OUT FOR

Ignoring where the dots are and always using $L_3 = +M$. That gives $L_3 = 4$ H, $L_1 = 3 - 4 = -1$ H and $L_2 = 2 - 4 = -2$ H, which is exactly distractor (B). Here the 2 H coil's dot is at its bottom (common) end, so i_2 enters the undotted terminal and the mutual terms are negative. A second trap is rejecting option (A) because it contains a negative inductance. Negative elements are allowed in an equivalent circuit.

Q.25 MCQ · 1 MARK

Networks (Electric Circuits) › AC, power & resonance

Three parallel admittances $Y_a = -j0.2$ S, $Y_b = 0.3$ S, and $Y_c = j0.4$ S connected in parallel with a voltage source $V_s = 10\angle 45^\circ$ V, draw a total current I_s from the source. The currents flowing through each of these admittances are I_a, I_b, and I_c, respectively. Let $I = I_b + I_c$. The phase relation between I and I_s is

(A) I leads I_s by 19.44°

(B) I lags I_s by 19.44°

(C) I leads I_s by 33.69°

(D) I lags I_s by 33.69°

Official answer: **A**

SOLUTION

1. All three admittances are in parallel across the same source, so each branch current is the source voltage times that branch's admittance: $I_a = Y_aV_s$, $I_b = Y_bV_s$, $I_c = Y_cV_s$ (Ohm's law in admittance form, $I = YV$).
2. Total current (admittances in parallel add): $I_s = V_s(Y_a + Y_b + Y_c) = V_s(-j0.2 + 0.3 + j0.4) = V_s(0.3 + j0.2)$.
3. Partial current: $I = I_b + I_c = V_s(Y_b + Y_c) = V_s(0.3 + j0.4)$.
4. Both currents carry the same factor V_s, so their phase difference is just the difference of the two admittance angles: $\angle(0.3 + j0.4) = \tan^{-1}\frac{0.4}{0.3} = 53.13^\circ$ and $\angle(0.3 + j0.2) = \tan^{-1}\frac{0.2}{0.3} = 33.69^\circ$.
5. The same result with the source angle included ($|0.3 + j0.4| = 0.5$ S, $|0.3 + j0.2| = \sqrt{0.13} = 0.3606$ S):

$$I = 10\angle 45^\circ \times 0.5\angle 53.13^\circ = 5\angle 98.13^\circ \text{ A}$$
$$I_s = 10\angle 45^\circ \times 0.3606\angle 33.69^\circ = 3.606\angle 78.69^\circ \text{ A}$$

6. Phase difference: $98.13^\circ - 78.69^\circ = 19.44^\circ$. I has the larger angle, so I leads I_s by 19.44°, which is option (A).

KEY IDEA

Every branch sees the same voltage V_s, so every current is V_s times an admittance. The angle between any two of these currents is therefore the angle between the two admittances, $\angle(Y_b + Y_c) - \angle(Y_a + Y_b + Y_c)$. The 45° of the source cancels out.

WATCH OUT FOR

Picking 33.69° (options C or D). That is the angle of I_s measured from V_s, not from I. Other slips are leaving out $Y_a = -j0.2$ S when forming I_s, and reading the sign the wrong way round: I is at the larger angle, so it leads I_s.

Q.26 MCQ · 1 MARK

Electrical and Electronic Measurements › Time, frequency & scopes

An oscilloscope has an input resistance of $1\ \text{M}\Omega$. A 10X passive attenuating probe is connected to it to increase the input voltage range as well as the effective input resistance. The effective input resistance, in $\text{M}\Omega$, seen into the probe tip is

(A) 0.9

(B) 9.1

(C) 10

(D) 11

Official answer: **C**

SOLUTION

1. A passive 10X probe puts a resistor R_p in series with the oscilloscope's input resistance $R_{in} = 1\ \text{M}\Omega$. The two resistors form a voltage divider, and the oscilloscope sees only the voltage across R_{in}.
2. The attenuation equals the divider ratio:
$$\frac{V_{tip}}{V_{scope}} = \frac{R_p + R_{in}}{R_{in}} = 10$$
3. Solve for the probe resistor, working in $\text{M}\Omega$: $R_p + 1 = 10 \Rightarrow R_p = 9\ \text{M}\Omega$.
4. Looking into the probe tip, the two resistors are in series, not in parallel:
$$R_{tip} = R_p + R_{in} = 9 + 1 = 10\ \text{M}\Omega$$
5. Check: the oscilloscope sees $V_{tip}/10$, so the usable input voltage range goes up by a factor of 10. The resistance loading the circuit under test also goes up by a factor of 10, so the probe draws less current. These are the two effects the question describes. The probe's compensation capacitor is trimmed so that $R_pC_p = R_{in}C_{in}$. It sets the frequency response and does not change the dc resistance.
6. Effective input resistance $= 10\ \text{M}\Omega$, which is option (C).

KEY IDEA

A 10X passive probe is a series resistor $R_p = 9R_{in}$ that forms a 10:1 divider with the oscilloscope's input resistance. At the tip, R_p and R_{in} are in series, so the tip resistance is $R_p + R_{in} = 10R_{in}$. The attenuation factor and the factor by which the input resistance rises are the same number.

WATCH OUT FOR

One mistake is to combine $R_p = 9\ \text{M}\Omega$ and $R_{in} = 1\ \text{M}\Omega$ in parallel, which gives $0.9\ \text{M}\Omega$ (option A). The other is to report only the probe resistor, $9\ \text{M}\Omega$, or to guess $R_{in}(1 + 1/10)$. The current from the tip passes through R_p and then through R_{in}, so the two resistors are in series and the total is $10\ \text{M}\Omega$.

Q.27 MCQ · 1 MARK

Control Systems › Routh–Hurwitz

For the transfer function $G(s) = 1 + \dfrac{2s-1}{s^3+5s^2+3s+22}$, the number of zeros lying in the left half of the s-plane is

(A) 0

(B) 1

(C) 2

(D) 3

Official answer: **D**

SOLUTION

1. Put $G(s)$ over one denominator:
$$G(s) = \frac{(s^3+5s^2+3s+22)+(2s-1)}{s^3+5s^2+3s+22} = \frac{s^3+5s^2+5s+21}{s^3+5s^2+3s+22}$$
2. The zeros of $G(s)$ are the roots of the combined numerator $N(s) = s^3+5s^2+5s+21$. They are not the root of $2s-1$, which is only the numerator of the second term.
3. Check for pole-zero cancellation. $N(s) - D(s) = 2s-1$, so a common root would have to be $s = \frac{1}{2}$. But $N(\frac{1}{2}) = 0.125 + 1.25 + 2.5 + 21 = 24.875 \neq 0$. Nothing cancels, so all three zeros remain.
4. Routh array for $N(s)$:
$$\begin{array}{ll} s^3: & 1 \qquad 5 \\ s^2: & 5 \qquad 21 \\ s^1: & \dfrac{5\cdot 5 - 1\cdot 21}{5} = \dfrac{4}{5} \\ s^0: & 21 \end{array}$$
5. The first column $1,\ 5,\ \frac{4}{5},\ 21$ is all positive. There are no sign changes and no zero rows, so $N(s)$ has no roots in the right half-plane and none on the $j\omega$ axis.
6. So all 3 zeros lie in the left half of the s-plane. (Numerical check: one real zero at about $s \approx -4.86$ and a complex pair at about $-0.07 \pm j2.08$.) Answer: (D) 3.

KEY IDEA

Because of the leading $1+$, you first have to rewrite $G(s)$ as a single fraction. Its zeros are then the roots of $D(s) + (2s-1) = s^3+5s^2+5s+21$. Apply the Routh criterion to that combined numerator, not to the denominator. For a cubic $s^3 + a_2s^2 + a_1s + a_0$ with all coefficients positive, every root is in the left half-plane exactly when $a_2a_1 > a_0$. Here $5\cdot 5 = 25 > 21$, so all three zeros are in the LHP.

WATCH OUT FOR

Reading the zeros off the $2s-1$ term gives a single zero at $s = +\frac{1}{2}$, which leads to the wrong answer (A) 0. A second mistake is running the Routh test on the denominator $s^3+5s^2+3s+22$. That polynomial gives the poles, not the zeros: its s^1 entry is $\frac{15-22}{5} < 0$, so it has two right-half-plane roots, and this can mislead you into picking (B) 1.

Q.28 MCQ · 1 MARK

Control Systems › Nyquist

Q.28	Consider the control system block diagram given in Figure (a). The loop transfer function $G(s)H(s)$ does not have any pole on the $j\omega$-axis. The counterclockwise contour with infinite radius, as shown in Figure (b), encircles two poles of $G(s)H(s)$. Choose the correct statement from the following options for closed loop stability of the system.
	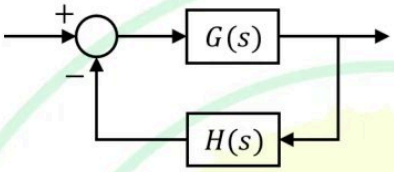 Figure (a) 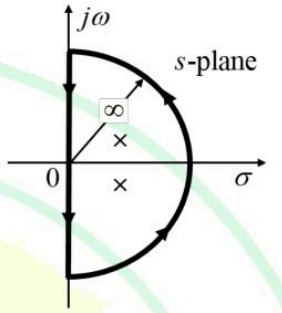 × : Poles encircled by the contour Figure (b)
(A)	The locus of $G(s)H(s)$ should encircle the origin twice in the counterclockwise direction
(B)	The locus of $1+G(s)H(s)$ should encircle the origin twice in the clockwise direction
(C)	The locus of $G(s)H(s)$ should encircle the $-1+j0$ point twice in the counterclockwise direction
(D)	The locus of $1+G(s)H(s)$ should encircle the $-1+j0$ point twice in the clockwise direction

Official answer: **B**

SOLUTION

1. Closed-loop characteristic function: $F(s) = 1 + G(s)H(s)$. Its poles are the open-loop poles, i.e. the poles of $G(s)H(s)$. Its zeros are the closed-loop poles.
2. Data: the contour of infinite radius encloses the whole right half-plane and contains $P = 2$ poles of $G(s)H(s)$, so $F(s)$ also has $P = 2$ poles inside it. No poles lie on the $j\omega$-axis, so the contour needs no indentation.

3. Argument principle (the direction matters): as s goes once round a closed contour, the image $F(s)$ encircles the origin $N = Z - P$ times *in the same direction the contour is traversed*. Here Z and P are the zeros and poles of F inside the contour.
4. The contour in Figure (b) runs up the semicircle and down the $j\omega$-axis, which keeps the enclosed right half-plane on its left, so it is **counterclockwise**. Therefore the net number of counterclockwise encirclements of the origin by $1 + G(s)H(s)$ is $N_{\text{ccw}} = Z - P$.
5. Closed-loop stability means no closed-loop poles in the right half-plane, i.e. $Z = 0$:
$$N_{\text{ccw}} = 0 - 2 = -2$$
6. A count of -2 counterclockwise encirclements is 2 **clockwise** encirclements of the origin by $1 + G(s)H(s)$. Since $G(s)H(s) = F(s) - 1$ is just $F(s)$ shifted left by 1, this is the same as $G(s)H(s)$ encircling $-1 + j0$ twice clockwise.
7. Check the options: (A) pairs $G(s)H(s)$ with the origin and (D) pairs $1 + G(s)H(s)$ with $-1 + j0$, so both use the wrong critical point. (C) is the textbook rule for the usual *clockwise* Nyquist contour, and it gets the direction backwards for the counterclockwise contour drawn here. Only (B) is correct.

KEY IDEA

The argument principle counts encirclements in the same direction as the s-plane contour is traversed. This contour is counterclockwise, so the counterclockwise encirclements of the origin by $1 + GH$ number $Z - P$. Stability needs $Z = 0$, and with $P = 2$ that gives -2 counterclockwise encirclements, which is 2 clockwise ones. For $1 + GH$ the critical point is the origin, and for GH it is $-1 + j0$.

WATCH OUT FOR

Picking (C) by habit. The memorised rule 'P counterclockwise encirclements of $-1 + j0$' assumes the usual clockwise Nyquist contour. The contour here is counterclockwise, so every encirclement direction flips. A second trap is using the wrong critical point: $-1 + j0$ goes with $G(s)H(s)$ and the origin goes with $1 + G(s)H(s)$. That rules out (A) and (D).

Q.29 MCQ · 1 MARK

Digital Electronics › Boolean logic

A Boolean function X is given as $X = \overline{A}\,\overline{B} + \overline{A}\,\overline{C}$. The reduced form of $\overline{X}$ is

(A) $\overline{A} + \overline{B} + \overline{C}$

(B) $A + BC$

(C) $\overline{A} + \overline{B} + C$

(D) $B + AC$

Official answer: **B**

SOLUTION

1. Complement is written with - throughout. Factor out the common literal first:
$$X = \overline{A}\,\overline{B} + \overline{A}\,\overline{C} = \overline{A}\,(\overline{B} + \overline{C})$$
2. Apply De Morgan's theorem to the product $\overline{A} \cdot (\overline{B} + \overline{C})$:
$$\overline{X} = \overline{\overline{A}\,(\overline{B} + \overline{C})} = \overline{\overline{A}} + \overline{(\overline{B} + \overline{C})} = A + \overline{(\overline{B} + \overline{C})}$$
3. Apply De Morgan's theorem again, to the sum: $\overline{\overline{B} + \overline{C}} = \overline{\overline{B}}\,\overline{\overline{C}} = BC$. Therefore
$$\overline{X} = A + BC$$
4. Check with minterms (taking A as the most significant bit). $X = 1$ only when $A = 0$ and B, C are not both 1, so $X = \sum m(0, 1, 2)$. Hence $\overline{X} = \sum m(3, 4, 5, 6, 7)$: minterms 4 to 7 are exactly A, and minterm 3 is $\overline{A}BC$. So $\overline{X} = A + \overline{A}BC = A + BC$ (absorption: $A + \overline{A}Y = A + Y$).
5. Rule out the other options with a single input each. At $A = B = C = 0$ we have $\overline{X} = 0$, but (A) $\overline{A} + \overline{B} + \overline{C} = 1$ and (C) $\overline{A} + \overline{B} + C = 1$, so both are wrong. At $A = 1,\ B = C = 0$ we have $\overline{X} = 1$, but (D) $B + AC = 0$, so (D) is wrong. The answer is option (B), $A + BC$.

KEY IDEA

Factor first, then complement: $X = \overline{A}(\overline{B} + \overline{C})$, and De Morgan applied twice gives $\overline{X} = A + BC$. De Morgan turns a complemented product into a sum of complements, and a complemented sum into a product of complements.

WATCH OUT FOR

Complementing each literal but keeping the AND/OR operators, which gives $AB + AC$. The other slip is doing De Morgan only halfway and writing $A + \overline{B} + \overline{C}$ or $\overline{A} + \overline{B} + \overline{C}$ (option A). Both · and + have to swap when you complement.

Q.30 MCQ · 1 MARK

Electromagnetics › Magnetostatics

Q.30	A 60 V DC source with an internal resistance $R_{int} = 0.5\,\Omega$ is connected through a switch to a pair of infinitely long rails separated by $l = 1\,\text{m}$ as shown in the figure. The rails are placed in a constant, uniform magnetic field of flux density $B = 0.5\,\text{T}$, directed into the page. A conducting bar placed on these rails is free to move. At the instant of closing the switch, the force induced on the bar is **Note**: Assume there is no friction between the bar and the rails. The resistances of the conducting bar and the rails are zero.
	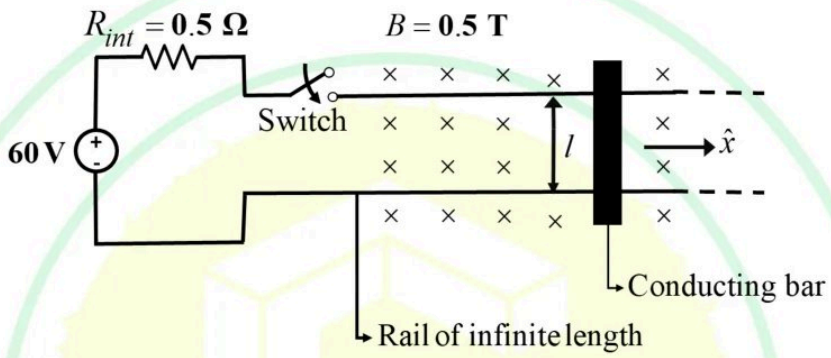
(A)	60 N in the direction of $\hat{x}$
(B)	60 N opposite to the direction of $\hat{x}$
(C)	120 N in the direction of $\hat{x}$
(D)	120 N opposite to the direction of $\hat{x}$

Official answer: **A**

SOLUTION

1. **Axes.** Take $\hat{a}_x = \hat{x}$ pointing right along the rails, $\hat{a}_y$ pointing up in the plane of the page, and $\hat{a}_z$ pointing out of the page, so that $\hat{a}_x \times \hat{a}_y = \hat{a}_z$. The field is into the page, so $\mathbf{B} = -0.5\,\hat{a}_z\ \text{T}$.
2. **The bar starts at rest.** At the instant the switch closes the bar has not moved yet, so $v = 0$ and the motional (back) emf Blv is zero. The bar and rails have zero resistance, so R_{int} is the only thing limiting the current.

3. **Ohm's law:** $I = \dfrac{V}{R_{int}} = \dfrac{60}{0.5} = 120\ \text{A}$.
4. **Which way the current flows:** out of the + terminal at the top, through R_{int} and the switch, right along the upper rail, **down through the bar**, then back along the lower rail to the − terminal. The length vector of the bar, taken along the current, is therefore $\mathbf{l} = -1\,\hat{a}_y\ \text{m}$.
5. **Force on a straight current-carrying conductor:** $\mathbf{F} = I\,\mathbf{l} \times \mathbf{B}$.
6. $$\mathbf{F} = (120)\,(-1\,\hat{a}_y) \times (-0.5\,\hat{a}_z) = 60\ (\hat{a}_y \times \hat{a}_z) = 60\,\hat{a}_x\ \text{N}$$
7. **Result:** the magnitude is $F = BIl = 0.5 \times 120 \times 1 = 60\,\text{N}$, and the force points along $+\hat{x}$, away from the source. As a check, the push enlarges the current loop, which is how a rail gun works. The answer is option (A).

KEY IDEA

At $t = 0^+$ the bar is stationary, so the motional emf Blv is zero and the current is set by R_{int} alone: $I = V/R_{int}$. The force on the bar is $\mathbf{F} = I\,\mathbf{l} \times \mathbf{B}$, where $\mathbf{l}$ points along the current in the bar. Its magnitude is BIl and the cross product gives its direction.

WATCH OUT FOR

Three mistakes are common. (1) Reporting the current, 120, as the force, which gives option (C). (2) Taking the current in the bar as upward, or reversing the order of the cross product ($\mathbf{B} \times \mathbf{l}$), which flips the direction and gives option (B). (3) Including a back emf, or concluding the force is zero because the bar is not yet moving. At the instant of closing, $v = 0$, so there is no back emf, but the current, and therefore the force, is already at its maximum.

Q.31 MSQ · 1 MARK

Analog Electronics › Op-amps

The circuits mentioned in the following options are realized using ideal opamp. Among these, the circuit(s) performing non-linear operation on the input signal is/are

(A) Instrumentation amplifier

(B) Schmitt trigger

(C) Logarithmic amplifier

(D) Precision rectifier

Official answer: **B, C, D**

SOLUTION

1. **Test for linearity (superposition and homogeneity).** A circuit is linear only if its output is a fixed linear combination of its inputs, e.g. $v_o = k\,v_i$, for every input. If scaling the input by a does not scale the output by a, or if the output depends on the sign or the past history of the input, the operation is non-linear. All op-amps are assumed ideal.
2. **(A) Instrumentation amplifier.** It uses negative feedback, so the ideal op-amps stay in their linear region. For the standard three-op-amp circuit (gain resistor R_G, input-stage resistors R, difference-stage resistors R_2 and R_3), $v_o = A_d\,(v_2 - v_1)$ with $A_d = \left(1 + \dfrac{2R}{R_G}\right)\dfrac{R_3}{R_2}$. That is a fixed linear combination of the inputs, so superposition holds and the circuit is **linear**.
3. **(B) Schmitt trigger.** It uses positive feedback, so the op-amp saturates and v_o takes only the values $+V_{sat}$ and $-V_{sat}$. The output switches at the upper threshold V_{UT} when the input is rising and at the lower threshold V_{LT} when it is falling (hysteresis). A two-level output that depends on the input's history cannot be written as $k\,v_i$, so the circuit is **non-linear**.
4. **(C) Logarithmic amplifier.** A diode (or a BJT) sits in the feedback path of an inverting stage with input resistor R. The inverting input is a virtual ground, so $I_D = v_i/R$ (for $v_i > 0$) and $v_o = -V_D$. The diode law $I_D = I_S\,e^{V_D/V_T}$ (the -1 term is neglected in forward conduction) gives

$$v_o = -V_T \ln\left(\frac{v_i}{I_S R}\right)$$

If the input is scaled by a, the output becomes $v_o - V_T \ln a$: a constant is added, the output is not multiplied by a. Homogeneity fails, so the circuit is **non-linear**.

5. **(D) Precision rectifier.** The diode inside the feedback loop conducts for only one polarity of input. For a typical half-wave circuit, $v_o = v_i$ for $v_i > 0$ and $v_o = 0$ for $v_i < 0$; for a full-wave circuit, $v_o = |v_i|$. A piecewise function like this breaks homogeneity (for example, $|-v| \neq -|v|$), so the circuit is **non-linear**. The high loop gain of the op-amp only removes the effect of the diode's cut-in voltage (about $0.7\ \text{V}$), so that small signals are rectified too. It does not make the operation linear.
6. **Result.** The non-linear circuits are the Schmitt trigger, the logarithmic amplifier and the precision rectifier: options **B, C, D**.

KEY IDEA

An op-amp circuit is linear only when its output is a fixed linear combination of its inputs (superposition and homogeneity both hold). Positive feedback with saturation (Schmitt trigger), an exponential device in the feedback path (log amplifier) and a diode that conducts for one polarity only (precision rectifier) all break this. A purely resistive negative-feedback network (instrumentation amplifier) keeps it.

WATCH OUT FOR

Calling the precision rectifier linear because the op-amp makes it 'precise' (no 0.7 V drop). The op-amp removes the diode's cut-in voltage but does not change the piecewise transfer characteristic, so the circuit is still non-linear. Another mistake is thinking every circuit built with negative feedback is linear: the log amplifier uses negative feedback but has an exponential device in its feedback path.

Q.32 NAT · 1 MARK

Engineering Mathematics › Linear algebra

If one of the eigenvectors of the matrix $A = \begin{bmatrix} -1 & -1 \\ x & -4 \end{bmatrix}$ is along the direction of $\begin{bmatrix} \alpha \\ 2\alpha \end{bmatrix}$, where α is any non-zero real number, then the value of x is _____ (in integer).

Official answer: **2**

SOLUTION

1. Any non-zero multiple of an eigenvector is also an eigenvector, so take $\alpha = 1$: $v = \begin{bmatrix} 1 \\ 2 \end{bmatrix}$.
2. Apply the definition of an eigenvector, $Av = \lambda v$:
$$\begin{bmatrix} -1 & -1 \\ x & -4 \end{bmatrix} \begin{bmatrix} 1 \\ 2 \end{bmatrix} = \begin{bmatrix} -1-2 \\ x-8 \end{bmatrix} = \begin{bmatrix} -3 \\ x-8 \end{bmatrix} = \lambda \begin{bmatrix} 1 \\ 2 \end{bmatrix}$$
3. The first row has no unknown in it, so it fixes the eigenvalue: $-3 = \lambda \cdot 1$, so $\lambda = -3$.
4. Second row: $x - 8 = 2\lambda = -6$, so $x = 2$.
5. Check with the characteristic equation $\det(A - \lambda I) = 0$ for $A = \begin{bmatrix} -1 & -1 \\ 2 & -4 \end{bmatrix}$: $(-1-\lambda)(-4-\lambda) + 2 = \lambda^2 + 5\lambda + 6 = 0$, so $\lambda = -2$ or $\lambda = -3$. For $\lambda = -3$, $A + 3I = \begin{bmatrix} 2 & -1 \\ 2 & -1 \end{bmatrix}$, which gives $2v_1 - v_2 = 0$, i.e. $v = \begin{bmatrix} 1 \\ 2 \end{bmatrix}$. The answer checks out.

KEY IDEA

If you are given an eigenvector but not its eigenvalue, write out $Av = \lambda v$ one row at a time. A row with no unknown in it gives you λ straight away, and the other row then gives the unknown entry. The scale α cancels, so set $\alpha = 1$.

WATCH OUT FOR

Assuming a value for λ, or trying to solve the characteristic equation with x still unknown, when $Av = \lambda v$ gives it directly. Another slip is multiplying v into the columns rather than the rows, which gives $x + 2(-4)$ in the wrong place or a sign error in $-1 - 2 = -3$. Also do not keep α as a variable: it cancels from both sides, and it cannot fix x.

Q.33 NAT · 1 MARK

Engineering Mathematics › Complex analysis

Consider the function $f(z) = \dfrac{2z+1}{z^2 - z}$, where z is a complex variable. The sum of the residues at singular points of $f(z)$ is _____ (in integer).

Official answer: **2**

SOLUTION

1. Factor the denominator: $z^2 - z = z(z-1)$, so $f(z) = \dfrac{2z+1}{z(z-1)}$. The only singular points are $z = 0$ and $z = 1$. The numerator $2z + 1$ is not zero at either point (it equals 1 and 3), so both are simple poles.
2. At a simple pole $z = a$ the residue is $\operatorname{Res}_{z=a} f = \lim_{z \to a} (z - a) f(z)$.
3. At $z = 0$: $\operatorname{Res}_{z=0} f = \left.\dfrac{2z+1}{z-1}\right|_{z=0} = \dfrac{1}{-1} = -1$.
4. At $z = 1$: $\operatorname{Res}_{z=1} f = \left.\dfrac{2z+1}{z}\right|_{z=1} = \dfrac{3}{1} = 3$.
5. Sum of the residues: $-1 + 3 = 2$.
6. Check with partial fractions: $\dfrac{2z+1}{z(z-1)} = \dfrac{-1}{z} + \dfrac{3}{z-1}$, because $\dfrac{-(z-1) + 3z}{z(z-1)} = \dfrac{2z+1}{z(z-1)}$. The residues are the coefficients, -1 and 3.
7. Second check: for large $|z|$, $f(z) = \dfrac{2z+1}{z^2 - z} \approx \dfrac{2}{z}$, so the residue at infinity is -2. All residues, including the one at infinity, add to zero, so the finite residues must add to $+2$.

KEY IDEA

For a proper rational function with simple poles, each residue is the partial-fraction coefficient: cover up the factor $(z - a)$ and put $z = a$ in what is left. As a quick check, the finite residues of a rational function add up to minus the residue at infinity. That equals the coefficient of $1/z$ in the large-$|z|$ expansion, here the leading-coefficient ratio $2/1 = 2$.

WATCH OUT FOR

Using $z = 1$ where the pole is at $z = 0$, or getting the sign wrong in $z - 1$ at $z = 0$, so the residue there comes out $+1$ instead of -1 and the sum becomes 4. Another slip is to include the residue at infinity (-2) in the sum and answer 0. The question asks only for the singular points, which are $z = 0$ and $z = 1$.

Q.34 NAT · 1 MARK

Digital Electronics › ADC & DAC

A dual-slope ADC has a fixed integration time of 100 ms. The reference voltage of the ADC is $-5\ \text{V}$. The time taken by the ADC to measure an input voltage of $1.25\ \text{V}$ is _____ ms (rounded off to the nearest integer).

Official answer: **125**

SOLUTION

1. **Phase 1 (run-up, fixed time):** the integrator integrates the unknown input V_{in} for a fixed time $T_1 = 100\ \text{ms}$. Its output reaches $|V_1| = \dfrac{V_{in}T_1}{RC}$.
2. **Phase 2 (run-down, variable time):** the integrator input is switched to the reference $V_{ref} = -5\ \text{V}$, which has the opposite polarity to V_{in}. The integrator output therefore ramps back towards zero at slope $\dfrac{|V_{ref}|}{RC}$, taking a time T_2 to reach zero.
3. **Charge balance (the dual-slope rule):** the rise in phase 1 equals the fall in phase 2,
$$\frac{V_{in}T_1}{RC} = \frac{|V_{ref}|\,T_2}{RC} \;\Rightarrow\; T_2 = T_1\,\frac{V_{in}}{|V_{ref}|}$$
The RC cancels, so the result does not depend on the component values.
4. **Run-down time:**
$$T_2 = 100\ \text{ms} \times \frac{1.25}{5} = 25\ \text{ms}$$
5. **Total measurement (conversion) time:** one measurement needs both phases, so
$$T_{conv} = T_1 + T_2 = 100 + 25 = 125\ \text{ms}$$

KEY IDEA

In a dual-slope ADC the run-down time is $T_2 = T_1\,V_{in}/|V_{ref}|$, independent of R and C. The time to measure one input is the fixed run-up time plus that run-down time: $T_{conv} = T_1 + T_2$.

WATCH OUT FOR

Giving only the run-down time, $T_2 = 25\ \text{ms}$, which is the part proportional to the input. The measurement also includes the fixed 100 ms integration of the input, so the answer is 125 ms. A second slip is carrying the minus sign of V_{ref} into the ratio and getting a negative time. The reference is negative only so that it opposes the input, and the magnitude is what sets the slope.

Q.35 NAT · 1 MARK

Analog Electronics › Biasing

Q.35 In the circuit shown, assume that the BJT in the circuit has very high β and $V_{BE} = 0.7$ V, and the Zener diode has $V_Z = 4.7$ V. The current I through the LED is _____ mA **(rounded off to two decimal places).**

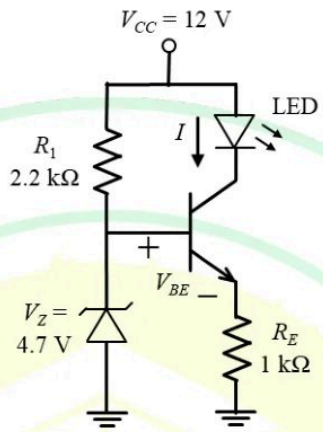

Official answer: **3.90 to 4.10**

SOLUTION

1. **Assumptions.** The BJT is NPN with $V_{BE} = 0.7$ V and very high β, so $I_B \to 0$ and $\alpha = \dfrac{\beta}{\beta + 1} \to 1$. The Zener diode is ideal in breakdown, with $V_Z = 4.7$ V. The LED's forward drop is not given, and we will see that it is not needed.
2. **Check the Zener.** Its cathode is at the base node and its anode is at ground, so it is reverse-biased. Suppose it were off. Then R_1 would carry only the negligible base current, and the base node would

rise far above $4.7\ \text{V}$ toward $12\ \text{V}$. That contradicts 'off', so the Zener is in breakdown and holds $V_B = V_Z = 4.7\ \text{V}$. Its current is $I_Z = \dfrac{12 - 4.7}{2.2\ \text{k}\Omega} - I_B \approx 3.32\ \text{mA} > 0$, which confirms breakdown.

3. **KVL across the base-emitter junction:** $V_E = V_B - V_{BE} = 4.7 - 0.7 = 4.0\ \text{V}$.
4. **Ohm's law on the emitter resistor:** $I_E = \dfrac{V_E}{R_E} = \dfrac{4.0\ \text{V}}{1\ \text{k}\Omega} = 4.0\ \text{mA}$.
5. **Collector current.** With very high β, $I_C = \alpha I_E \approx I_E$. The LED is in series with the collector, so
$$I = I_C \approx I_E = 4.00\ \text{mA}.$$
6. **Check the operating region.** The collector voltage is $V_C = 12 - V_{LED}$. The BJT stays in the active region as long as V_C stays above about $V_E + V_{CE(\text{sat})} \approx 4.2\ \text{V}$, which means $V_{LED} \lesssim 7.8\ \text{V}$. Any single LED (forward drop roughly 1.8 to $3.5\ \text{V}$) meets this easily. So the assumption holds. The LED current does not depend on the LED's own drop, which is why this circuit works as a constant-current LED driver.

KEY IDEA

The Zener fixes the base at $4.7\ \text{V}$, so the emitter sits one V_{BE} lower at $4.0\ \text{V}$. That fixes $I_E = V_E/R_E$. With very high β, $I_C = I_E$, and the LED in the collector carries this current whatever its forward drop is. The circuit is a Zener-referenced constant-current sink.

WATCH OUT FOR

One mistake is to find the current through R_1 instead, $(12 - 4.7)/2.2\ \text{k}\Omega \approx 3.32\ \text{mA}$. That is the Zener current, not the LED current. Another is to forget to subtract V_{BE} and get $4.7\ \text{V}/1\ \text{k}\Omega = 4.70\ \text{mA}$. A third is to try to use an LED forward voltage. It is not given and does not affect the answer while the BJT stays active.

Q.36 MCQ · 2 MARKS

Engineering Mathematics › Vector calculus

The value of the surface integral $\iint_S (2x + z)\,dy\,dz + (2x + z)\,dx\,dz + (2z + y)\,dx\,dy$ over the sphere S : $x^2 + y^2 + z^2 = 9$ is

(A) 72π

(B) 144π

(C) 36π

(D) 432π

Official answer: **B**

SOLUTION

1. The integral is in flux form, $\iint_S F_1\,dy\,dz + F_2\,dz\,dx + F_3\,dx\,dy = \iint_S \vec{F} \cdot \hat{n}\,dS$, with $\vec{F} = (2x + z)\,\hat{i} + (2x + z)\,\hat{j} + (2z + y)\,\hat{k}$. The sphere is a closed surface, so we take the outward normal.
2. The paper prints the middle term as $dx\,dz$, not the standard $dz\,dx$. As an oriented area element, $dx\,dz = -\,dz\,dx$, so the most this can do is flip the sign of F_2. Since $F_2 = 2x + z$ does not depend on y, $\partial F_2/\partial y = 0$ with either sign, and the answer is the same.
3. Apply the Gauss divergence theorem: $\oint_S \vec{F} \cdot \hat{n}\,dS = \iiint_V (\nabla \cdot \vec{F})\,dV$, where V is the solid ball $x^2 + y^2 + z^2 \le 9$.
4. Divergence:
$$\nabla \cdot \vec{F} = \frac{\partial}{\partial x}(2x + z) + \frac{\partial}{\partial y}(2x + z) + \frac{\partial}{\partial z}(2z + y) = 2 + 0 + 2 = 4$$
5. The divergence is a constant, so the volume integral is 4 times the volume of the ball. The radius is $r = 3$:
$$V = \frac{4}{3}\pi r^3 = \frac{4}{3}\pi(27) = 36\pi$$
6. So

$$\oint_S \vec{F} \cdot \hat{n}\, dS = 4 \times 36\pi = 144\pi$$

which is option (B).

KEY IDEA

Read $F_1\, dy\, dz + F_2\, dz\, dx + F_3\, dx\, dy$ over a closed surface as the outward flux of $\vec{F} = (F_1, F_2, F_3)$. Then use the divergence theorem. Here $\nabla \cdot \vec{F} = 4$ is constant, so the flux is just $4\times$ the volume of the ball of radius 3.

WATCH OUT FOR

Using the surface area of the sphere ($4\pi r^2 = 36\pi$) where the enclosed volume ($\frac{4}{3}\pi r^3 = 36\pi$) is needed. For $r = 3$ these happen to be the same number, which hides the error, and it gives the wrong answer for any other radius. Other slips: taking the radius as 9 instead of $\sqrt{9} = 3$ (which gives a far larger value), writing $\partial(2x + z)/\partial y = 1$ (divergence 5, so 180π, which is not an option), and dropping one of the two 2's to get 72π (option A).

Q.37 MCQ · 2 MARKS

Engineering Mathematics › Numerical methods

Newton-Raphson method is used to compute the inverse of the number 1.6. Among the following options, the initial guess of the solution that results in non-convergence of the iterative process is

(A) 0.55

(B) 0.75

(C) 1.15

(D) 1.25

Official answer: **D**

SOLUTION

1. Choose a function whose root is $\frac{1}{1.6} = 0.625$ and whose Newton-Raphson update needs no division: $f(x) = \frac{1}{x} - 1.6$, so $f'(x) = -\frac{1}{x^2}$. (With $f(x) = 1.6x - 1$ the update divides by 1.6, which is the very thing being computed, and since f is linear the method lands on the root in one step from any guess, so no option could fail. The intended function is therefore $f(x) = \frac{1}{x} - 1.6$.)
2. Newton-Raphson update $x_{n+1} = x_n - \frac{f(x_n)}{f'(x_n)}$:
$$x_{n+1} = x_n + x_n^2\left(\frac{1}{x_n} - 1.6\right) = x_n\,(2 - 1.6\,x_n)$$
3. Define the relative error $e_n = 1 - 1.6\,x_n$. Then $1 - 1.6\,x_{n+1} = 1 - 3.2x_n + 2.56x_n^2 = (1 - 1.6x_n)^2$, i.e.
$$e_{n+1} = e_n^2 \;\Rightarrow\; e_n = e_0^{2^n}$$
4. Convergence condition: $e_n \to 0$ (that is, $x_n \to 0.625$) only if $|e_0| < 1$, i.e. $-1 < 1 - 1.6x_0 < 1 \iff 0 < x_0 < \frac{2}{1.6} = 1.25$.
5. Check the options: $x_0 = 0.55 \Rightarrow e_0 = 0.12$; $x_0 = 0.75 \Rightarrow e_0 = -0.2$; $x_0 = 1.15 \Rightarrow e_0 = -0.84$. All have $|e_0| < 1$, so all three converge. Even $x_0 = 1.15$, the most distant of them, gets there: $x_1 = 1.15 \times 0.16 = 0.184$, $x_2 \approx 0.314$, $x_3 \approx 0.470$, $x_4 \approx 0.587$, $x_5 \approx 0.623$, heading for 0.625.
6. For $x_0 = 1.25$: $e_0 = 1 - 2 = -1$, so $|e_0| = 1$ and the condition fails. Directly, $x_1 = 1.25\,(2 - 1.6 \times 1.25) = 1.25 \times 0 = 0$. After that the iteration stays at $x_2 = x_3 = \cdots = 0$, and $f(0)$ is not even defined. It never approaches 0.625.
7. So the initial guess that does not converge is $x_0 = 1.25$, option (D).

KEY IDEA

To find $1/a$ with Newton-Raphson, apply it to $f(x) = \frac{1}{x} - a$. That gives the division-free iteration $x_{n+1} = x_n(2 - ax_n)$. Its relative error $e_n = 1 - ax_n$ squares at every step ($e_{n+1} = e_n^2$), so the method converges exactly when $0 < x_0 < 2/a$. Here $2/1.6 = 1.25$, and that boundary value is one of the options.

WATCH OUT FOR

Using $f(x) = 1.6x - 1$ instead. That function is linear, so Newton-Raphson reaches the root in one step from any guess and none of the options would fail. A second mistake is treating the boundary $x_0 = 2/a = 1.25$ as safe because it 'looks close' to 0.625. At the boundary $|e_0| = 1$, the first step sends x_1 to exactly 0 and the iteration sticks there. A third is picking 0.55 or 1.15 because they look far from the root: both lie inside $(0, 1.25)$ and both converge.

Q.38 MCQ · 2 MARKS

Engineering Mathematics › Calculus

The value of the integral $\int_{-\pi}^{\pi} \left(\cos^6 x + \cos^4 x\right) dx$ is

(A) $\frac{\pi}{2}$

(B) $\frac{5\pi}{8}$

(C) $\frac{11\pi}{8}$

(D) $\frac{9\pi}{8}$

Official answer: **C**

SOLUTION

1. Since $\cos(-x) = \cos x$, the integrand $f(x) = \cos^6 x + \cos^4 x$ is even, so $\int_{-\pi}^{\pi} f(x)\,dx = 2\int_0^{\pi} f(x)\,dx$.
2. For even n, $\cos^n(\pi - x) = (-\cos x)^n = \cos^n x$. Substituting $x \to \pi - x$ on $[\pi/2, \pi]$ maps it onto $[0, \pi/2]$, so $\int_0^{\pi} \cos^n x\,dx = 2\int_0^{\pi/2} \cos^n x\,dx$. Combined with step 1: $\int_{-\pi}^{\pi} \cos^n x\,dx = 4\int_0^{\pi/2} \cos^n x\,dx$ for even n.
3. Wallis' formula for even n: $\int_0^{\pi/2} \cos^n x\,dx = \frac{(n-1)(n-3)\cdots 1}{n(n-2)\cdots 2} \cdot \frac{\pi}{2}$.
4. For $n = 6$: $\int_0^{\pi/2} \cos^6 x\,dx = \frac{5\cdot 3\cdot 1}{6\cdot 4\cdot 2} \cdot \frac{\pi}{2} = \frac{5\pi}{32}$, so $\int_{-\pi}^{\pi} \cos^6 x\,dx = 4 \cdot \frac{5\pi}{32} = \frac{5\pi}{8}$.
5. For $n = 4$: $\int_0^{\pi/2} \cos^4 x\,dx = \frac{3\cdot 1}{4\cdot 2} \cdot \frac{\pi}{2} = \frac{3\pi}{16}$, so $\int_{-\pi}^{\pi} \cos^4 x\,dx = 4 \cdot \frac{3\pi}{16} = \frac{3\pi}{4} = \frac{6\pi}{8}$.
6. Add the two:

$$\int_{-\pi}^{\pi} \left(\cos^6 x + \cos^4 x\right) dx = \frac{5\pi}{8} + \frac{6\pi}{8} = \frac{11\pi}{8}.$$

This is option (C).

KEY IDEA

Over one full period $[-\pi, \pi]$, an even power of cosine equals four times its integral over $[0, \pi/2]$. Wallis' formula then gives $\int_{-\pi}^{\pi} \cos^n x\,dx = 2\pi \cdot \frac{(n-1)(n-3)\cdots 1}{n(n-2)\cdots 2}$ for even n, which is $\frac{5\pi}{8}$ for $n = 6$ and $\frac{3\pi}{4}$ for $n = 4$. Integrate each term separately and add.

WATCH OUT FOR

Using the $[0, \pi/2]$ Wallis value directly, without multiplying by 4 for the full interval $[-\pi, \pi]$, gives $\frac{5\pi}{32} + \frac{3\pi}{16} = \frac{11\pi}{32}$, which is not an option. Doubling only once (for evenness) gives $\frac{11\pi}{16}$. Picking (B) $\frac{5\pi}{8}$ means only the $\cos^6 x$ term was evaluated and the $\cos^4 x$ term was dropped.

Q.39 MCQ · 2 MARKS

Signals and Systems › LTI & convolution

Let $y[n] = \frac{1}{\alpha}\, y[n-1] + x[n]$, where $\alpha > 1$ and real, represent a difference equation of a causal discrete-time linear time invariant system. The system is initially at rest. If $x[n] = \delta[n-p]$ where $p > 10$, the value of $y[p+1]$ is

(A) 0

(B) 1

(C) $\frac{1}{\alpha}$

(D) $\frac{1}{\alpha^2}$

Official answer: **C**

SOLUTION

1. **Initial rest + causality:** the input $x[n] = \delta[n-p]$ is zero for every $n < p$, and the system starts at rest, so $y[n] = 0$ for all $n < p$. In particular $y[p-1] = 0$.
2. **Iterate the recursion at $n = p$:** $y[p] = \frac{1}{\alpha}\, y[p-1] + \delta[p-p] = \frac{1}{\alpha} \cdot 0 + \delta[0] = 1$.
3. **Iterate at $n = p+1$:** $y[p+1] = \frac{1}{\alpha}\, y[p] + \delta[1] = \frac{1}{\alpha} \cdot 1 + 0 = \frac{1}{\alpha}$.
4. **Check with the impulse response:** with $x[n] = \delta[n]$ the same recursion gives $h[n] = \alpha^{-n} u[n]$. Equivalently, $H(z) = \frac{1}{1 - \alpha^{-1} z^{-1}}$, and causality fixes the ROC as $|z| > 1/\alpha$.
5. **Time invariance:** a shifted input gives a shifted output, so $x[n] = \delta[n-p] \Rightarrow y[n] = h[n-p] = \alpha^{-(n-p)} u[n-p]$. Therefore
$$y[p+1] = h[1] = \alpha^{-1} = \frac{1}{\alpha}.$$
6. The value of p does not matter. Because the system is time invariant, $y[p+1]$ is always $h[1]$, so the condition $p > 10$ changes nothing. The condition $\alpha > 1$ only makes the system stable (pole at $z = 1/\alpha$, inside the unit circle) and does not affect $h[1]$ either. The answer is option (C).

KEY IDEA

For an LTI system at initial rest, the response to $\delta[n-p]$ is the impulse response delayed by p. So $y[p+1] = h[1]$, and one step of the recursion $h[n] = \frac{1}{\alpha} h[n-1] + \delta[n]$ gives $h[0] = 1$, $h[1] = 1/\alpha$.

WATCH OUT FOR

Reading the answer at the wrong index. $y[p] = 1$ (option B) is the value at the instant the impulse arrives, but the question asks for one sample later, $y[p+1] = 1/\alpha$. Going two samples later gives $1/\alpha^2$ (option D), and forgetting that the output only starts at $n = p$ gives 0 (option A). A second trap is thinking that $p > 10$ or $\alpha > 1$ changes the value. Neither does.

Q.40 MCQ · 2 MARKS

Digital Electronics › Sequential

Q.40	The clock frequency of the digital circuit shown in the figure is 12 MHz. The frequencies of the output (F) corresponding to Control = 0 and Control = 1, respectively, are
	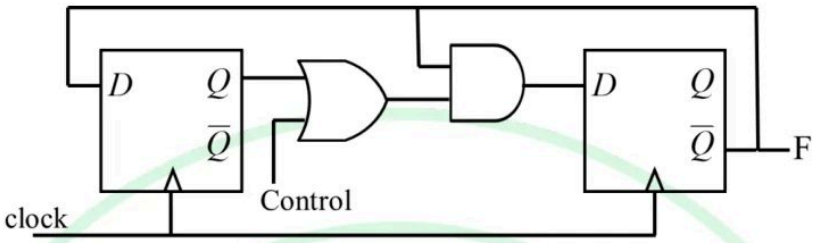
(A)	4 MHz and 6 MHz
(B)	6 MHz and 4 MHz
(C)	3 MHz and 4 MHz
(D)	3 MHz and 6 MHz

Official answer: **A**

SOLUTION

1. Read the next-state equations off the figure. Overline means complement, and C stands for Control. $D_1 = \overline{Q_2}$, $D_2 = \overline{Q_2}\,(Q_1 + C)$, and the output is $F = \overline{Q_2}$. Both flip-flops share the clock, and for a D flip-flop $Q^+ = D$.
2. **Control = 1:** $Q_1 + 1 = 1$, so $D_2 = \overline{Q_2}$. FF2 is wired as a toggle flip-flop and changes state on every clock edge, whatever Q_1 is.

3. A toggling output completes one full cycle every 2 clock periods, so it divides the clock by 2: $f_F = \dfrac{12\ \text{MHz}}{2} = 6\ \text{MHz}$.
4. **Control = 0:** $D_2 = \overline{Q_2}\,Q_1$ and $D_1 = \overline{Q_2}$. Trace the states (Q_1Q_2) with $Q^+ = D$. From 00: $D_1 = 1$, $D_2 = 1 \cdot 0 = 0$, so the next state is 10. From 10: $D_1 = 1$, $D_2 = 1 \cdot 1 = 1$, so the next state is 11. From 11: $\overline{Q_2} = 0$ makes both D inputs 0, so the next state is 00.
5. The unused state 01 also has $\overline{Q_2} = 0$, so $D_1 = D_2 = 0$ and it goes to 00. Whatever state the circuit starts in, it ends up in the 3-state cycle $00 \to 10 \to 11 \to 00$.
6. Over one cycle $F = \overline{Q_2}$ reads $1, 1, 0$, so it repeats every 3 clock periods (duty cycle $\frac{2}{3}$): $f_F = \dfrac{12\ \text{MHz}}{3} = 4\ \text{MHz}$.
7. So F is 4 MHz for Control = 0 and 6 MHz for Control = 1, which is option (A).

KEY IDEA

Write the D-input equations and trace the state sequence. The output frequency is the clock frequency divided by the number of clock periods before F repeats. With Control = 1 the OR gate is forced to 1 and FF2 becomes a toggle flip-flop (divide by 2). With Control = 0 the feedback from $\overline{Q_2}$ gives the 3-state cycle 00 → 10 → 11 (divide by 3). The unused state 01 falls into that cycle.

WATCH OUT FOR

Assuming two flip-flops always make a mod-4 counter and dividing by 4 (3 MHz, options C and D), without tracing the states. Another is swapping the order the question asks for (Control = 0 first), which gives option (B).

Q.41 MCQ · 2 MARKS

Signals and Systems › Fourier series

Q.41	A chopper amplifier shown in the figure is designed to process a biomedical signal $v_{in}(t)$ to generate conditioned output $v_{out}(t)$. The signals $v_{in}(t)$ and $v_{os}(t)$ are band limited to 50 Hz and 10 Hz, respectively. For the system to operate as a linear amplifier, choose the correct statement from the following options.
	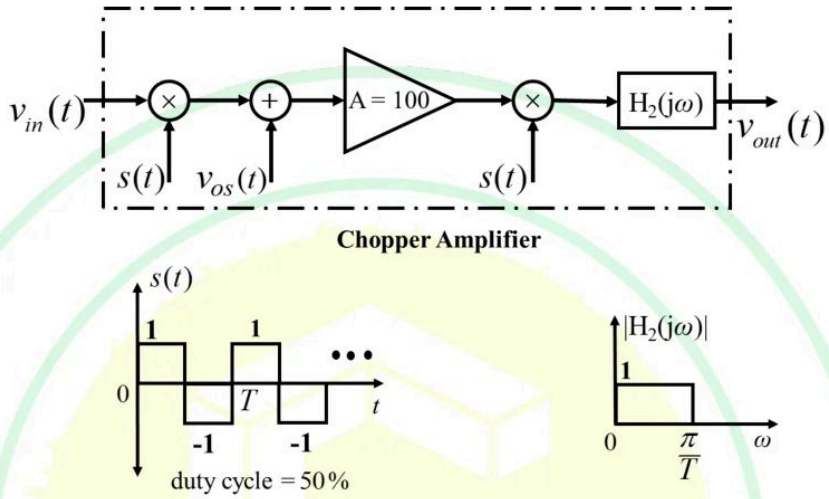
(A)	The minimum frequency of $s(t)$ required is 100 Hz and $v_{os}(t)$ gets attenuated by the system
(B)	The minimum frequency of $s(t)$ required is 100 Hz and $v_{os}(t)$ also gets amplified by the system by a factor $\frac{200}{\pi}$
(C)	The minimum frequency of $s(t)$ required is 80 Hz and $v_{os}(t)$ gets attenuated by the system
(D)	The minimum frequency of $s(t)$ required is 80 Hz and $v_{os}(t)$ also gets amplified by the system by a factor $\frac{200}{\pi}$

Official answer: **A**

SOLUTION

1. **Signal before the filter.** The first multiplier gives $v_{in}(t)s(t)$. The summer adds $v_{os}(t)$, the amplifier multiplies by 100, and the second multiplier multiplies by $s(t)$ again:
$$x(t) = 100\,[v_{in}(t)s(t) + v_{os}(t)]\,s(t) = 100\,v_{in}(t)\,s^2(t) + 100\,v_{os}(t)\,s(t)$$
2. **Use $s^2(t) = 1$.** $s(t)$ is $+1$ or -1 at every instant, apart from the switching instants, which take up zero time and so do not affect the output. That gives $s^2(t) = 1$ and

$$x(t) = 100\, v_{in}(t) + 100\, v_{os}(t)\, s(t)$$

The input comes back at baseband with gain 100, whatever the chopping frequency.

3. **Fourier series of $s(t)$.** $s(t)$ is a ± 1 square wave with a 50% duty cycle and period T. Its average (DC term) is zero and it contains only odd harmonics:
$$s(t) = \frac{4}{\pi} \sum_{n=1,3,5,\ldots} \frac{1}{n} \sin(n\omega_0 t), \qquad \omega_0 = \frac{2\pi}{T},\ f_s = \frac{1}{T}$$
4. **Where the offset term lands (modulation property).** Multiplying by $s(t)$ copies the 0 to 10 Hz spectrum of $v_{os}(t)$ into bands centred on $f_s, 3f_s, 5f_s, \ldots$. Because $s(t)$ has no DC term, no copy stays at baseband. The lowest offset frequency in $x(t)$ is therefore $f_s - 10$ Hz.
5. **The filter cutoff in hertz.** H_2 is an ideal low-pass filter with cutoff $\omega_c = \pi/T$, so
$$f_c = \frac{\pi/T}{2\pi} = \frac{1}{2T} = \frac{f_s}{2}$$
6. **Condition 1: pass v_{in} undistorted.** The filter has to pass the whole 50 Hz band of v_{in}:
$$f_c \geq 50 \text{ Hz} \ \Rightarrow\ \frac{f_s}{2} \geq 50 \ \Rightarrow\ f_s \geq 100 \text{ Hz}$$
At $f_s = 80$ Hz the cutoff would be 40 Hz, and the 40 to 50 Hz part of v_{in} would be lost. So 80 Hz is not enough.
7. **Condition 2: reject the offset.** The lowest offset component has to lie above the cutoff:
$$f_s - 10 > \frac{f_s}{2} \ \Rightarrow\ f_s > 20 \text{ Hz}$$
At $f_s = 100$ Hz the offset occupies 90 to 110 Hz and higher odd-harmonic bands. All of that is above $f_c = 50$ Hz.
8. **Conclusion.** Both conditions hold when $f_s \geq 100$ Hz, so the minimum chopping frequency is 100 Hz. At that frequency $v_{out}(t) = 100\, v_{in}(t)$. The offset $v_{os}(t)$ is removed (attenuated) by the system, not amplified. This is option (A).

KEY IDEA

The input is multiplied by the ±1 square wave twice. Since $s^2(t) = 1$, it comes back at baseband with gain 100. The offset enters between the two multipliers, so it is multiplied only once. Because $s(t)$ has no DC term, the offset ends up near the odd harmonics $f_s, 3f_s, \ldots$. The output filter's cutoff π/T equals $f_s/2$ in hertz. It must pass the 50 Hz signal band, which gives $f_s \geq 100$ Hz. At that frequency the offset band (90 to 110 Hz and up) lies outside the passband.

WATCH OUT FOR

One mistake is to take the fundamental amplitude $4/\pi$ of $s(t)$ and conclude that the offset reaches the output with gain $100 \cdot \frac{4}{\pi} \cdot \frac{1}{2} = \frac{200}{\pi}$ (options B and D). That component sits at $f_s \pm 10$ Hz, above the filter cutoff $f_s/2$, so it never reaches v_{out}. Another mistake is to read the cutoff π/T as a frequency in hertz, or never to check it against the signal band. At $f_s = 80$ Hz the cutoff is only 40 Hz, so part of the 50 Hz signal band is cut off (options C and D).

Q.42 MCQ · 2 MARKS

Digital Electronics › Processors & memory

Q.42	An 8-bit microprocessor has 16-bit address bus ($A_{15} - A_0$) where A_0 is the LSB. As shown in Figure (a), it has a pre-installed 4 KB ROM whose starting address is 0000 H. The processor needs to be upgraded by adding a 16 KB RAM as shown in Figure (b). The address range for the newly added RAM is
	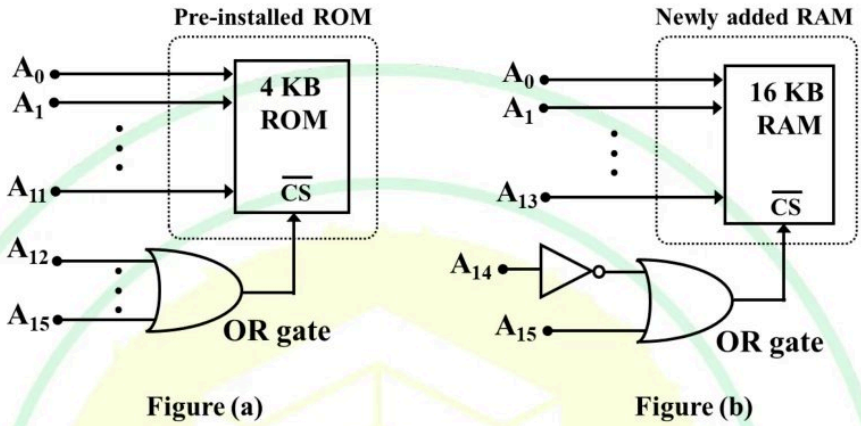
(A)	1000 H – 4FFF H
(B)	3000 H – 6FFF H
(C)	4000 H – 7FFF H
(D)	8000 H – BFFF H

Official answer: **C**

SOLUTION

1. Size check: $16\ \text{KB} = 16 \times 1024 = 2^{14}$ locations, so the RAM uses the 14 address lines $A_{13} \ldots A_0$ internally. The remaining lines A_{15} and A_{14} go to the chip-select logic.
2. Decoding logic (the prime means complement): A_{14} passes through the inverter and A_{15} goes straight into the OR gate, so the RAM's chip select is $\overline{CS} = A_{15} + A'_{14}$.

3. $\overline{CS}$ is active low, so the RAM is selected only when $A_{15} + A'_{14} = 0$. An OR output is 0 only if every input is 0. So $A_{15} = 0$ and $A'_{14} = 0$, which means $A_{14} = 1$.
4. Lowest address: $A_{15}A_{14} = 01$ with $A_{13} \ldots A_0$ all 0, which is $(0100\ 0000\ 0000\ 0000)_2 = 4000\ \mathrm{H}$.
5. Highest address: $A_{15}A_{14} = 01$ with $A_{13} \ldots A_0$ all 1, which is $(0111\ 1111\ 1111\ 1111)_2 = 7\mathrm{FFF\ H}$.
6. Consistency check: the ROM's $\overline{CS} = A_{12} + A_{13} + A_{14} + A_{15}$ is 0 only when all four lines are 0, so the ROM occupies $0000\ \mathrm{H}$ to $0\mathrm{FFF\ H}$ (2^{12} locations $= 4\ \mathrm{KB}$, starting at $0000\ \mathrm{H}$ as the question says). This does not overlap $4000\ \mathrm{H}$ to $7\mathrm{FFF\ H}$. The RAM spans $(7\mathrm{FFF})_{16} - (4000)_{16} + 1 = (4000)_{16} = 16384$ locations $= 16\ \mathrm{KB}$, which matches its size.
7. So the RAM's address range is $4000\ \mathrm{H}$ to $7\mathrm{FFF\ H}$, which is option (C).

KEY IDEA

Address lines that go straight into a memory chip change freely across its range. The lines that feed the chip-select logic are fixed at the values that make the active-low $\overline{CS}$ equal to 0. Here $\overline{CS} = A_{15} + A'_{14}$ is 0 only for $A_{15}A_{14} = 01$. The 14 free lines $A_{13} \ldots A_0$ then run from all 0s to all 1s, giving $4000\ \mathrm{H}$ to $7\mathrm{FFF\ H}$.

WATCH OUT FOR

Treating $\overline{CS}$ as active high, or forgetting the inverter on A_{14}. Both errors give $A_{15}A_{14} = 00$ or 10, which lands on a wrong block such as $8000\ \mathrm{H}$ to $\mathrm{BFFF\ H}$ (option D). Another trap is placing the RAM straight after the 4 KB ROM at $1000\ \mathrm{H}$ (option A). The decoder, not the ROM's size, decides where the RAM sits, and a 16 KB block decoded on $A_{15}A_{14}$ always starts on a 16 KB boundary.

Q.43 MCQ · 2 MARKS

Digital Electronics › ADC & DAC

Q.43	A 3-bit DAC is implemented using ideal opamp and switches as shown in the figure. Each of the switches gets closed when its corresponding digital input is at logic 1. For a digital input of 110, the resistance R_{in} seen from the reference source and the current I, are
	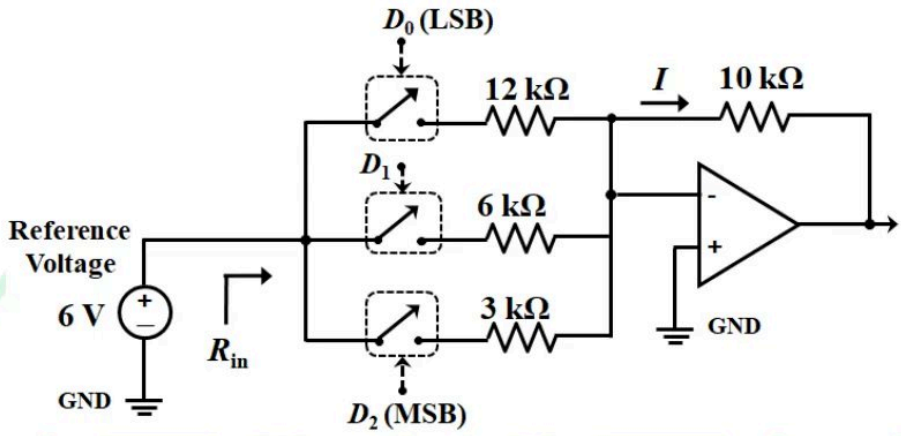
(A)	$R_{in} = 2$ kΩ and $I = 3$ mA
(B)	$R_{in} = 12$ kΩ and $I = 0.5$ mA
(C)	$R_{in} = \infty$ Ω and $I = 1$ mA
(D)	$R_{in} = \infty$ Ω and $I = 3$ mA

Official answer: **A**

SOLUTION

1. Decode the input $D_2D_1D_0 = 110$: the D_2 switch (3 kΩ) and the D_1 switch (6 kΩ) close, and the D_0 switch (12 kΩ) stays open.
2. Virtual ground: the + input is grounded and the ideal op-amp has negative feedback through the 10 kΩ resistor, so the − input sits at 0 V. The right-hand ends of all three resistors are therefore at 0 V.

3. An open switch leaves its branch floating, so the 12 kΩ branch carries no current and plays no part. In this circuit it is not switched to ground.
4. The source therefore sees only the two closed branches in parallel, each running from $6\ \text{V}$ to virtual ground:
$$R_{in} = 3\ \text{k}\Omega \parallel 6\ \text{k}\Omega = \frac{3 \times 6}{3+6}\ \text{k}\Omega = 2\ \text{k}\Omega$$
5. Branch currents by Ohm's law: $I_{3k} = \dfrac{6\ \text{V}}{3\ \text{k}\Omega} = 2\ \text{mA}$ and $I_{6k} = \dfrac{6\ \text{V}}{6\ \text{k}\Omega} = 1\ \text{mA}$.
6. KCL at the inverting node: an ideal op-amp input draws no current, so the whole branch current goes through the 10 kΩ feedback resistor:
$$I = 2 + 1 = 3\ \text{mA} = \frac{V_{ref}}{R_{in}} = \frac{6\ \text{V}}{2\ \text{k}\Omega}$$
7. (Not needed for the answer: an ideal op-amp output would be $V_o = -I \times 10\ \text{k}\Omega = -30\ \text{V}$.) So $R_{in} = 2\ \text{k}\Omega$ and $I = 3\ \text{mA}$, which is option (A).

KEY IDEA

In a binary-weighted-resistor DAC, the op-amp's inverting input is a virtual ground. Each closed branch therefore runs from V_{ref} to $0\ \text{V}$ and draws V_{ref}/R on its own. The reference source sees the closed branches in parallel, and their currents add in the feedback resistor, so $I = V_{ref}/R_{in}$.

WATCH OUT FOR

There are three common mistakes. (1) Reading the bits in the wrong order, as if $D_0 = 1$, $D_1 = 1$, $D_2 = 0$. That closes the 12 kΩ and 6 kΩ branches and gives 4 kΩ and 1.5 mA, which is not an option. (2) Taking I as the current in the top 12 kΩ branch only, because the arrow is drawn at that node. This leads towards option (B), yet that branch is open and carries nothing. I is the total current into the summing node. (3) Treating the op-amp input as an open circuit, which gives $R_{in} = \infty$ (options C and D). The inverting input draws no current, but it is held at 0 V, so each closed branch still draws current from the source.

Q.44 MCQ · 2 MARKS

Networks (Electric Circuits) › Three-phase (EE)

Power consumed by a three-phase balanced load is measured using two-wattmeter method. The per-phase average power drawn by the load is 30 kW at $\dfrac{\sqrt{3}}{2}$ lagging power factor. The readings of the wattmeters will be

(A) 15 kW and 15 kW
(B) 22.5 kW and 7.5 kW
(C) 60 kW and 30 kW
(D) 45 kW and 45 kW

Official answer: **C**

SOLUTION

1. **Total power.** The load is balanced and the 30 kW is *per phase*, so the total three-phase power is $P = 3 \times 30 = 90\ \text{kW}$.
2. **Power-factor angle.** $\cos\phi = \dfrac{\sqrt{3}}{2}$ lagging, so $\phi = 30^\circ$ and $\sin\phi = \dfrac{1}{2}$.
3. **Line volt-ampere product.** For a balanced three-phase load, $P = \sqrt{3}\,V_L I_L \cos\phi$, so
$$V_L I_L = \frac{P}{\sqrt{3}\cos\phi} = \frac{90}{\sqrt{3} \cdot \frac{\sqrt{3}}{2}} = \frac{90}{1.5} = 60\ \text{kVA}$$

4. **Two-wattmeter readings** (balanced load, lagging pf): $W_1 = V_L I_L \cos(30^\circ - \phi)$ and $W_2 = V_L I_L \cos(30^\circ + \phi)$.
5. **Substitute $\phi = 30^\circ$:**

$$W_1 = 60 \cos 0^\circ = 60 \text{ kW}$$
$$W_2 = 60 \cos 60^\circ = 30 \text{ kW}$$

6. **Check:** $W_1 + W_2 = 90 \text{ kW} = P$, and $\tan\phi = \dfrac{\sqrt{3}\,(W_1 - W_2)}{W_1 + W_2} = \dfrac{\sqrt{3} \cdot 30}{90} = \dfrac{1}{\sqrt{3}}$, which gives $\phi = 30^\circ$ as required. The readings are 60 kW and 30 kW, option (C).

KEY IDEA

In the two-wattmeter method on a balanced load, the readings add up to the total three-phase power, and they are $V_L I_L \cos(30^\circ \mp \phi)$. At a power factor of $\cos 30^\circ$, one meter reads the full $V_L I_L$ and the other reads half of it. The two readings are then in a $2:1$ ratio and add up to $3\times$ the per-phase power.

WATCH OUT FOR

Taking the 30 kW as the total power instead of the per-phase power. That gives readings of 20 kW and 10 kW, which is not an option, or pushes you towards (A) or (B), whose readings also add up to only 30 kW. A second mistake is splitting the total power equally, as in (D). That is only true at unity power factor. At 30 degrees lagging the two meters read differently.

Q.45 MCQ · 2 MARKS

Networks (Electric Circuits) › Theorems

Q.45	The bridge circuit, shown in Figure (a), can be equivalently represented using the circuit shown in Figure (b). The values of R_1, R_2, and V_C in the equivalent circuit are
	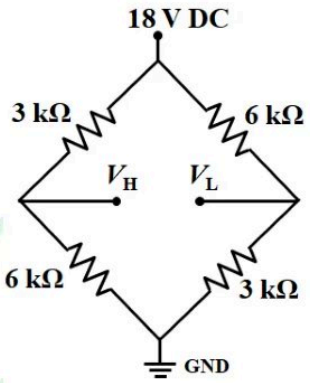 Figure (a) 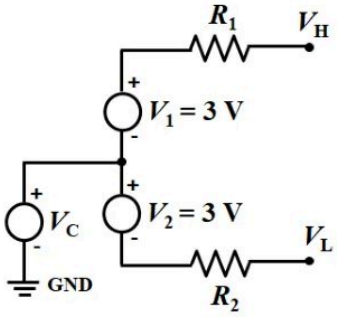 Figure (b)
(A)	$R_1 = 6$ kΩ, $R_2 = 3$ kΩ, and $V_C = 9$ V
(B)	$R_1 = 3$ kΩ, $R_2 = 6$ kΩ, and $V_C = 4.5$ V
(C)	$R_1 = 2$ kΩ, $R_2 = 2$ kΩ, and $V_C = 9$ V
(D)	$R_1 = 2$ kΩ, $R_2 = 2$ kΩ, and $V_C = 4.5$ V

Official answer: **C**

SOLUTION

1. Nothing connects V_H to V_L. Both halves of the bridge hang from the same ideal 18 V source, which holds the top node at 18 V whatever current is drawn, so the left arm pair and the right arm pair act as two separate voltage dividers. Each half has its own Thevenin equivalent measured from GND.
2. Left half, open-circuit voltage by the voltage-divider rule: $V_H = 18 \times \dfrac{6}{3+6} = 12\ \text{V}$.

3. Left half, Thevenin resistance: replace the ideal 18 V source with a short. The $3\ \text{k}\Omega$ and $6\ \text{k}\Omega$ resistors are then in parallel between V_H and GND: $R_1 = \dfrac{3 \times 6}{3+6} = 2\ \text{k}\Omega$.
4. Right half, voltage-divider rule: $V_L = 18 \times \dfrac{3}{6+3} = 6\ \text{V}$. Thevenin resistance: $R_2 = 6 \parallel 3 = \dfrac{6 \times 3}{6+3} = 2\ \text{k}\Omega$.
5. In Figure (b), apply KVL from GND to V_H at open circuit. No current flows in R_1, and V_1 has its $+$ terminal on the V_H side, so $V_H = V_C + V_1 = V_C + 3$. With $V_H = 12\ \text{V}$ this gives $V_C = 9\ \text{V}$.
6. Check along the lower path with KVL. V_2 has its $+$ terminal at the middle node, so $V_L = V_C - V_2 = 9 - 3 = 6\ \text{V}$. This matches the divider result, so the equivalent is consistent. In Figure (b) the ideal source V_C also holds the middle node fixed, so the two outputs stay independent, just as they are in Figure (a).
7. So $R_1 = R_2 = 2\ \text{k}\Omega$ and $V_C = 9\ \text{V}$, which is option (C).

KEY IDEA

Each half of the bridge is a voltage divider fed by an ideal source, so it reduces to its own Thevenin equivalent measured from GND: $V_H = 12\ \text{V}$ behind $2\ \text{k}\Omega$ and $V_L = 6\ \text{V}$ behind $2\ \text{k}\Omega$. Figure (b) splits these into a common-mode part and a differential part. $V_C = \dfrac{V_H + V_L}{2} = 9\ \text{V}$ is the common-mode voltage, and $V_1 = V_2 = \dfrac{V_H - V_L}{2} = 3\ \text{V}$ is half the bridge's differential output, which is why both are 3 V.

WATCH OUT FOR

Using only the resistor from the output node to GND as the Thevenin resistance. That gives $R_1 = 6\ \text{k}\Omega$ and $R_2 = 3\ \text{k}\Omega$ (option A). When you find the Thevenin resistance, the ideal 18 V source becomes a short, so each output sees both of its arms in parallel: $3 \parallel 6 = 2\ \text{k}\Omega$. A second trap is getting the sign of V_2 wrong. $V_L = V_C - V_2$, not $V_C + V_2$, because the $+$ terminal of V_2 faces the middle node.

Q.46 MCQ · 2 MARKS

Electrical Machines › Induction machines

A 2-pole, 50 Hz, 3-phase induction motor supplies power to a certain load at 2970 rpm. The torque-speed curve of this machine follows a linear relationship between synchronous speed and 95% of synchronous speed. Assume mechanical and stray losses to be zero. If the load torque of the motor is doubled, the new operating speed of the motor, in rpm, is

(A) 2940
(B) 2812
(C) 2970
(D) 2850

Official answer: **A**

SOLUTION

1. Step 1: Synchronous speed N_s = 120f/P = (120*50)/2 = 3000 rpm.
2. Step 2: The torque-speed curve is linear from N_s (zero torque) down to 0.95N_s = 2850 rpm, so in this range T = C(N_s - N) for some constant C (torque proportional to slip speed).
3. Step 3: At the given operating point, slip speed = N_s - N_1 = 3000 - 2970 = 30 rpm, so T_1 = 30C.
4. Step 4: Doubling the load torque (losses are zero, so motor torque = load torque): T_2 = 2T_1 = 60C.
5. Step 5: Using T_2 = C(N_s - N_2): N_s - N_2 = 60 rpm.
6. Step 6: New speed N_2 = 3000 - 60 = 2940 rpm, which lies between 2850 rpm and 3000 rpm, confirming the linear-region assumption holds. Hence the answer is 2940 rpm, Option A.

KEY IDEA

In the linear region of the induction-motor torque-speed curve (from synchronous speed down to 95% of synchronous speed), torque is directly proportional to slip speed ($N_s - N$). Doubling the load torque doubles the slip speed.

WATCH OUT FOR

Forgetting to verify that the doubled-torque operating point (2940 rpm) still lies inside the linear segment (between 3000 rpm and 2850 rpm) before accepting it.

Q.47 MCQ · 2 MARKS

Control Systems › Compensators & PID

Q.47	The figure shows a closed-loop system with a plant $G(s)=\frac{1}{s^2}$ and a lead compensator $C(s)$. The compensator is designed to place the dominant closed-loop poles at $-1.5\pm j\frac{\sqrt{27}}{2}$. From the following options, choose the phase lead that the compensator needs to contribute.
	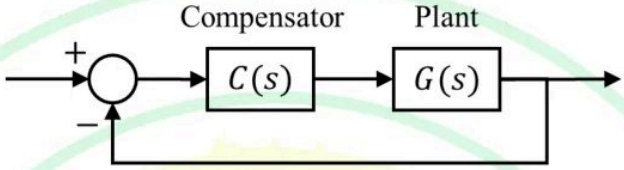
(A)	30°
(B)	60°
(C)	90°
(D)	120°

Official answer: **B**

SOLUTION

1. Desired closed-loop pole: $s_d=-1.5+j\frac{\sqrt{27}}{2}=-1.5+j2.598$. Since $\left(\frac{\sqrt{27}}{2}\right)^2=6.75$, its distance from the origin is $|s_d|=\sqrt{1.5^2+6.75}=\sqrt{9}=3$, so $\omega_n=3\ \text{rad/s}$ and $\zeta=1.5/3=0.5$.

2. Angle of the vector drawn from a pole at the origin to s_d, which lies in the second quadrant: $\angle s_d = 180^\circ - \tan^{-1}\left(\frac{2.598}{1.5}\right) = 180^\circ - \tan^{-1}\left(\sqrt{3}\right) = 180^\circ - 60^\circ = 120^\circ$.
3. Plant phase at s_d: $G(s) = 1/s^2$ has a double pole at the origin, and each pole contributes $-\angle s_d$, so $\angle G(s_d) = -2 \times 120^\circ = -240^\circ$.
4. Root-locus angle condition: for s_d to be a closed-loop pole of the unity-feedback loop, $\angle C(s_d) + \angle G(s_d) = \pm 180^\circ(2k+1)$.
5. Required compensator phase: $\angle C(s_d) = -180^\circ - (-240^\circ) = +60^\circ$. (Using $+180^\circ$ instead gives 420°, which is the same direction, 60°.) The compensator must supply a phase lead of 60°.
6. Check: without compensation, $1 + K/s^2 = 0$ gives $s = \pm j\sqrt{K}$, so the locus lies only on the $j\omega$ axis. The locus has to be pulled into the left half-plane, and a positive (lead) angle at s_d is what does that. This agrees with option (B).

KEY IDEA

Use the root-locus angle condition at the desired pole. Every open-loop pole at the origin contributes $-\angle s_d$, measured from the positive real axis. The compensator has to supply whatever angle is still needed to bring the total to an odd multiple of 180°. Here that is $-180^\circ - (-2 \times 120^\circ) = 60^\circ$.

WATCH OUT FOR

One mistake is to measure the pole angle from the negative real axis (60°) instead of from the positive real axis (120°). The plant phase then comes out as -120°, which wrongly calls for -60° (a lag). Another is to count the double pole at the origin only once. A third is to pick 120° (D) because that is $\angle s_d$ itself, not the deficit the compensator has to make up.

Q.48 MCQ · 2 MARKS

Signals and Systems › Fourier transform

Let $f(t)$ and $g(t)$ represent continuous-time real-valued signals. If $h(t)$ denotes cross-correlation between $f(t)$ and $g(-t)$, its continuous-time Fourier transform $H(j\omega)$ equals

Note: $F(j\omega)$ and $G(j\omega)$ denote the continuous-time Fourier transforms of $f(t)$ and $g(t)$, respectively.

(A) $F(j\omega)G(j\omega)$

(B) $F(-j\omega)G(j\omega)$

(C) $F(j\omega)G(-j\omega)$

(D) $-F(j\omega)G(-j\omega)$

Official answer: **A**

SOLUTION

1. Definition of cross-correlation for real signals:
$$R_{xy}(\tau) = \int_{-\infty}^{\infty} x(t)\, y(t-\tau)\, dt = \int_{-\infty}^{\infty} x(t+\tau)\, y(t)\, dt$$
Here $x(t) = f(t)$ and $y(t) = g(-t)$.
2. Substitute $y(t-\tau) = g\big(-(t-\tau)\big) = g(\tau - t)$:
$$h(\tau) = \int_{-\infty}^{\infty} f(t)\, g(\tau - t)\, dt = f(\tau) * g(\tau)$$
Correlating with a time-reversed signal is the same as convolving with the original signal.
3. Convolution property of the Fourier transform: $f * g \;\longleftrightarrow\; F(j\omega)\, G(j\omega)$, so $H(j\omega) = F(j\omega)\, G(j\omega)$.
4. Check with the correlation theorem: $R_{xy}(\tau) = x(\tau) * y(-\tau) \longleftrightarrow X(j\omega)\, Y(-j\omega) = X(j\omega)\, Y^*(j\omega)$ for real y. Time reversal gives $Y(j\omega) = G(-j\omega)$. Because g is real, $G(-j\omega) = G^*(j\omega)$, so $Y^*(j\omega) = G(j\omega)$ and $H(j\omega) = F(j\omega)G(j\omega)$ again.
5. Option (C), $F(j\omega)G(-j\omega)$, is the transform of the cross-correlation of f with $g(t)$ itself, not with $g(-t)$. Option (B), $F(-j\omega)G(j\omega)$, is the transform of the correlation taken in the other order, g with f. Option

(D) is (C) with a minus sign that has no source. The answer is (A).

KEY IDEA

Cross-correlation is convolution with the second signal time-reversed: $R_{xy}(\tau) = x(\tau) * y(-\tau)$. If the second signal is already $g(-t)$, the two reversals cancel, $h = f * g$, and the convolution property gives $H(j\omega) = F(j\omega)G(j\omega)$.

WATCH OUT FOR

Using the correlation theorem as $F(j\omega)G^*(j\omega) = F(j\omega)G(-j\omega)$ with G instead of the transform of $g(-t)$. That gives option (C), which is the answer for correlating f with $g(t)$ and ignores the time reversal the question builds in. Swapping the order of the two signals gives option (B).

Q.49 MSQ · 2 MARKS

Engineering Mathematics › Complex analysis

Choose the correct statement(s) from the following options, regarding Cauchy's theorem on complex integration $\oint_C f(z)\,dz$ where C is a simple closed path in a simply connected domain D.

(A) Cauchy's theorem cannot be directly applied to conclude that $\oint_C f(z)\,dz = 0$ when $f(z) = \frac{1}{z^2}$, and C is the unit circle

(B) If $f(z)$ is analytic in D, then it can be concluded that $\oint_C f(z)\,dz = 0$ for any simple closed path C in D

(C) The function $f(z)$ must be analytic in D to conclude $\oint_C f(z)\,dz = 0$ for any simple closed path C in D

(D) $\oint_C f(z)\,dz \neq 0$ when $f(z) = \frac{1}{z^2}$, since the function is not analytic at $z = 0$

Official answer: **A, B**

SOLUTION

1. **Cauchy's integral theorem:** if $f(z)$ is analytic in a simply connected domain D, then $\oint_C f(z)\,dz = 0$ for every simple closed path C in D. Statement (B) is exactly this theorem, so **(B) is true**.
2. **(A):** $f(z) = \dfrac{1}{z^2}$ is not defined at $z = 0$, where it has a pole of order 2. A simply connected domain D that contains the unit circle $|z| = 1$ must also contain everything inside it, including $z = 0$. So f is not analytic in D, the hypothesis of Cauchy's theorem fails, and the theorem cannot be used directly to conclude $\oint_C f(z)\,dz = 0$. **(A) is true.**
3. **(D), computed directly:** on $|z| = 1$ put $z = e^{i\theta}$, so $dz = ie^{i\theta}\,d\theta$:
$$\oint_C \frac{dz}{z^2} = \int_0^{2\pi} e^{-2i\theta}\, ie^{i\theta}\,d\theta = i\int_0^{2\pi} e^{-i\theta}\,d\theta = i\left[\frac{e^{-i\theta}}{-i}\right]_0^{2\pi} = -\left(e^{-2\pi i} - 1\right) = 0$$
4. **Check with residues:** the Laurent series of z^{-2} about 0 is just z^{-2}. It has no z^{-1} term, so $\operatorname{Res}_{z=0}\dfrac{1}{z^2} = 0$ and $\oint_C = 2\pi i \cdot 0 = 0$. Put another way, $\dfrac{1}{z^2}$ has the single-valued antiderivative $F(z) = -\dfrac{1}{z}$ for $z \neq 0$, so its integral around any closed path that does not pass through 0 is $F(\text{end}) - F(\text{start}) = 0$. In general $\oint_{|z|=1} z^n\,dz = 0$ for every integer $n \neq -1$. The integral is zero even though f is not analytic at 0, so **(D) is false**: a function that fails to be analytic at a point inside C does not, for that reason alone, have a non-zero integral.
5. **(C):** Cauchy's theorem makes analyticity a *sufficient* condition for $\oint_C f(z)\,dz = 0$. It is not a *necessary* one. Step 4 gives a counterexample: $f(z) = 1/z^2$ is not analytic at $z = 0$, yet its integral is zero around every closed path that avoids $z = 0$, including paths that enclose it. So it is false that f "must" be analytic. (Morera's theorem, a partial converse, also requires f to be continuous at every point of D. $1/z^2$ is not even defined at 0, so the example does not contradict it.) **(C) is false.**
6. Correct statements: **(A) and (B)**.

KEY IDEA

Cauchy's theorem runs one way only: if f is analytic in D, the integral is zero. The converse does not follow. A function with a singularity inside C can still have a zero integral whenever its residue there is zero. $1/z^2$ is the standard example, because it has the single-valued antiderivative $-1/z$. The theorem is silent in that case, so you cannot use it, but you also cannot conclude the integral is non-zero.

WATCH OUT FOR

Reading Cauchy's theorem as "analytic if and only if the integral is zero". That reading makes (C) and (D) look true: (D) because "not analytic, therefore non-zero" and (C) because "must be analytic". The integral of $1/z^2$ around the unit circle is 0 because the residue is 0. Some students also cite Morera's theorem to defend (C), but Morera needs f to be continuous throughout D, and $1/z^2$ is not continuous at $z = 0$.

Q.50 MSQ · 2 MARKS

Control Systems › Compensators & PID

Q.50	The plant in the feedback control system shown in the figure is $P(s)=\frac{a}{s^2-b^2}$, where $a>0$ and $b>0$. The type(s) of controller $C(s)$ that CANNOT stabilize the plant is/are
	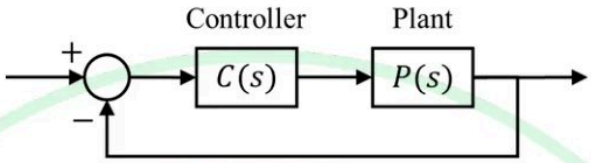
(A)	proportional (P) controller
(B)	integral (I) controller
(C)	proportional-integral (PI) controller
(D)	proportional-derivative (PD) controller

Official answer: **A, B, C**

SOLUTION

1. Closed-loop characteristic equation for unity negative feedback: $1+C(s)P(s)=0 \Rightarrow s^2-b^2+aC(s)=0$ (after clearing any denominator of $C(s)$). The plant on its own has poles at $s=\pm b$, so one pole is in the right half-plane and the controller has to move it. Test used throughout: a polynomial can have all its roots in the open left half-plane only if every coefficient is present and all have the same sign. For a second-order polynomial this condition is also sufficient.
2. P controller, $C(s)=K_p$:

$$s^2 + (aK_p - b^2) = 0$$

There is no s^1 term. If $aK_p < b^2$ the roots are $\pm\sqrt{b^2 - aK_p}$, one of them real and positive. If $aK_p = b^2$ there is a double root at $s = 0$. If $aK_p > b^2$ the roots are $\pm j\sqrt{aK_p - b^2}$, which only gives sustained oscillation (marginal stability). No real K_p puts both roots in the left half-plane, so P cannot stabilize the plant.

3. I controller, $C(s) = \dfrac{K_i}{s}$: multiply through by s:

$$s^3 + 0 \cdot s^2 - b^2 s + aK_i = 0$$

The s^2 term is missing, and the s coefficient is $-b^2 < 0$ whatever K_i is. The necessary condition fails for every K_i, so I cannot stabilize the plant.

4. PI controller, $C(s) = K_p + \dfrac{K_i}{s}$: multiply through by s:

$$s^3 + 0 \cdot s^2 + (aK_p - b^2)s + aK_i = 0$$

The s^2 coefficient is zero for every choice of K_p and K_i. That coefficient equals minus the sum of the three roots, so the roots always sum to zero and cannot all have negative real parts. (In the Routh array the s^2 row starts with a zero for the same reason.) So PI cannot stabilize the plant.

5. PD controller, $C(s) = K_p + K_d s$:

$$s^2 + aK_d\, s + (aK_p - b^2) = 0$$

A second-order polynomial is stable exactly when all its coefficients are positive. Since $a > 0$, that holds for $K_d > 0$ and $K_p > \dfrac{b^2}{a}$. For example, with $K_d > 0$ and $K_p = \dfrac{2b^2}{a}$ the equation is $s^2 + aK_d s + b^2 = 0$, whose roots are both in the left half-plane. So PD can stabilize the plant.

6. Why this happens: write $C(s) = \dfrac{N_c(s)}{D_c(s)}$, so the characteristic polynomial is $D_c(s)(s^2 - b^2) + a\,N_c(s)$.

The plant polynomial $s^2 - b^2$ has no damping (s^1) term. With P, N_c is a constant, so no s term appears. With I or PI, $D_c = s$ gives $s^3 - b^2 s$, and $aN_c(s)$ has degree at most 1, so nothing can fill the s^2 slot. Only the derivative term $K_d s$ in N_c adds the missing s^1 coefficient.

7. So the controllers that CANNOT stabilize the plant are P, I and PI: options (A), (B) and (C).

KEY IDEA

Form the closed-loop characteristic polynomial $D_c(s)(s^2 - b^2) + aN_c(s)$ and apply the necessary condition for stability: every coefficient present and positive. The plant has no s^1 (damping) term. P cannot add one. An integrator raises the order to three but always leaves the s^2 coefficient at zero. Only derivative action ($K_d s$) supplies the missing term.

WATCH OUT FOR

Treating P control with $aK_p > b^2$ as stabilizing. It puts the poles at $\pm j\sqrt{aK_p - b^2}$, which is only marginally stable (sustained oscillation), not asymptotically stable. Another mistake is assuming PI must work because it has two gains to tune: the s^2 coefficient stays zero whatever K_p and K_i are. Also watch the word CANNOT, which makes some candidates mark only (D).

Q.51 MSQ · 2 MARKS

Signals and Systems › LTI & convolution

Choose the eigenfunction(s) of stable linear time-invariant continuous-time systems from the following options.

(A) $e^{j\frac{2\pi}{3}t}$

(B) $\cos\left(\dfrac{2\pi}{3}t\right)$

(C) 2^t

(D) $\sin\left(\frac{2\pi}{3}t\right)$

Official answer: **A, C**

Q.52 NAT · 2 MARKS

Engineering Mathematics › Probability & statistics

The probability of a student missing a class is 0.1. In a total number of 10 classes, the probability that the student will not miss more than one class is ___ (rounded off to two decimal places).

Official answer: **0.72 to 0.76**

SOLUTION

1. Let X be the number of classes missed out of 10. Treat each class as an independent trial with miss probability $p = 0.1$. Then $X \sim \text{Binomial}(n = 10,\ p = 0.1)$ and $q = 1 - p = 0.9$.
2. "Will not miss more than one class" means $X \le 1$, so we need $P(X = 0) + P(X = 1)$.
3. The binomial pmf is $P(X = k) = \binom{n}{k} p^k q^{n-k}$. This gives $P(X = 0) = \binom{10}{0}(0.1)^0(0.9)^{10} = (0.9)^{10}$ and $P(X = 1) = \binom{10}{1}(0.1)(0.9)^9 = 10 \times 0.1 \times (0.9)^9 = (0.9)^9$.
4. Take out the common factor $(0.9)^9$:
$$P(X \le 1) = (0.9)^{10} + (0.9)^9 = (0.9)^9\,(0.9 + 1) = 1.9\,(0.9)^9$$
5. With $(0.9)^9 = 0.387420489$: $P(X \le 1) = 1.9 \times 0.387420489 = 0.736099 \approx 0.74$ (to two decimal places).

KEY IDEA

Treat the 10 classes as independent trials with a fixed miss probability of 0.1. The number missed is then $\text{Binomial}(10, 0.1)$. "Not more than one" means $X \le 1$, so add $P(X = 0)$ and $P(X = 1)$. Here $\binom{10}{1}(0.1) = 1$, so $P(X = 1) = (0.9)^9$ and the whole sum factors to $1.9\,(0.9)^9$.

WATCH OUT FOR

Reading "not more than one" as "exactly one" gives only $P(X = 1) = (0.9)^9 \approx 0.39$. Reading it as "none" gives only $(0.9)^{10} \approx 0.35$. A third slip is swapping p and q, using 0.9 as the miss probability, which gives a tiny wrong value. Another is using the Poisson approximation with $\lambda = np = 1$: it gives $2e^{-1} \approx 0.7358$. That happens to round to 0.74 here, but it is an approximation, and the exact binomial is what the question asks for.

Q.53 NAT · 2 MARKS

Sensors and Industrial Instrumentation › Sensing principles

Q.53

A metallic strain-gauge (SG) with resistance R_{SG} is connected as shown in the figure, where R_{L1}, R_{L2}, R_{L3} represent the lead wire resistances. The SG has a gauge factor of 2 and nominal resistance R_N of 125 Ω. When the SG is subjected to a tensile strain of 2×10^{-3}, the resulting change in R_{SG} is ΔR. The ΔR value is measured as $\Delta R_{MEAS} = R_{EQ2} - R_{EQ1}$. The R_{EQ1} and R_{EQ2} are the equivalent resistances measured between the terminals 1 and 2, and terminals 2 and 3, respectively.

If $R_{L1} = R_{L2} = 5$ Ω, and $R_{L3} = 4.95$ Ω, the measured value of tensile strain is ___$\times10^{-3}$ **(rounded off to two decimal places)**.

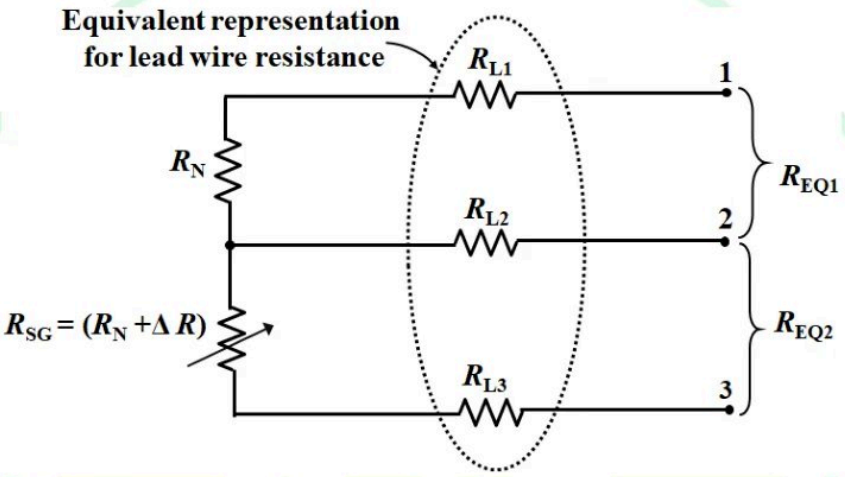

Official answer: **1.75 to 1.85**

SOLUTION

1. Read the figure: R_N and $R_{SG} = R_N + \Delta R$ are in series on the left. Terminal 1 connects through R_{L1} to the top of R_N, terminal 2 through R_{L2} to the junction of R_N and R_{SG}, and terminal 3 through R_{L3} to the bottom of R_{SG}.
2. Between terminals 1 and 2 the path is R_{L1}, then R_N, then R_{L2}:

$$R_{EQ1} = R_{L1} + R_N + R_{L2}$$

3. Between terminals 2 and 3 the path is R_{L2}, then R_{SG}, then R_{L3}:
$$R_{EQ2} = R_{L2} + (R_N + \Delta R) + R_{L3}$$
4. Subtract. R_N and R_{L2} cancel:
$$\Delta R_{MEAS} = R_{EQ2} - R_{EQ1} = \Delta R + R_{L3} - R_{L1}$$
5. The true change in the gauge follows from $G = \dfrac{\Delta R/R_N}{\varepsilon}$:
$$\Delta R = G\,R_N\,\varepsilon = 2 \times 125 \times 2 \times 10^{-3} = 0.5\ \Omega$$
6. The lead mismatch is $R_{L3} - R_{L1} = 4.95 - 5 = -0.05\ \Omega$, so
$$\Delta R_{MEAS} = 0.5 - 0.05 = 0.45\ \Omega$$
7. The instrument converts the measured change to strain assuming no lead error:
$$\varepsilon_{meas} = \frac{\Delta R_{MEAS}}{G\,R_N} = \frac{0.45}{2 \times 125} = 1.8 \times 10^{-3}$$

KEY IDEA
In the three-wire connection, R_{L2} appears in both R_{EQ1} and R_{EQ2} and cancels in the difference. Only the mismatch $R_{L3} - R_{L1}$ is left as an error added to ΔR. Strain is then $\Delta R_{MEAS}/(G\,R_N)$.

WATCH OUT FOR
Using $R_{EQ2} - R_{EQ1} = \Delta R + R_{L1} - R_{L3}$ with the sign reversed gives 0.55 and a strain of 2.2. The path between terminals 2 and 3 contains R_{L3}, and the path between 1 and 2 contains R_{L1}. Another slip is reporting the true strain of 2.00 and ignoring the lead mismatch.

Q.54 NAT · 2 MARKS

Signals and Systems › DTFT & DFT

Let $X\left(e^{j\omega}\right)$ represent the discrete time Fourier transform of a 4-length sequence $x[n]$, where $x[0] = 1$, $x[1] = 2$, $x[2] = 2$, and $x[3] = 4$. $X\left(e^{j\omega}\right)$ is sampled at $\omega_k = \dfrac{2\pi k}{3}$ to generate a periodic sequence in k with period 3, where k represents an integer. Let $y[n]$ represent another sequence such that its discrete Fourier transform $Y[k]$ is given as $Y[k] = X\left(e^{j\omega_k}\right)$ for $0 \le k \le 2$. The value of $y[0]$ is _____ (in integer).

Official answer: **5**

SOLUTION

1. Sample the DTFT at $N = 3$ equally spaced frequencies $\omega_k = \dfrac{2\pi k}{3}$:
$$Y[k] = X\left(e^{j2\pi k/3}\right) = \sum_{n=0}^{3} x[n]\,e^{-j2\pi kn/3}, \quad k = 0, 1, 2.$$
2. Take the 3-point IDFT and swap the order of summation:
$$y[n] = \frac{1}{3}\sum_{k=0}^{2} Y[k]\,e^{j2\pi kn/3} = \sum_{m=0}^{3} x[m]\left[\frac{1}{3}\sum_{k=0}^{2} e^{j2\pi k(n-m)/3}\right], \quad 0 \le n \le 2.$$
3. The bracketed sum is 1 when $n - m$ is a multiple of 3 and 0 otherwise. So sampling in frequency aliases in time: the length-4 sequence wraps modulo 3,
$$y[n] = \sum_{r} x[n + 3r], \quad 0 \le n \le 2.$$
4. For $n = 0$, the samples with $m \equiv 0 \pmod 3$ are $m = 0$ and $m = 3$. (Equivalently, $e^{-j2\pi k \cdot 3/3} = e^{-j2\pi k} = 1$, so $x[3]$ enters $Y[k]$ exactly as a sample at $n = 0$ would.) Hence
$$y[0] = x[0] + x[3] = 1 + 4 = 5,$$
and $y[1] = x[1] = 2$, $y[2] = x[2] = 2$.
5. Numerical check. With $W = e^{-j2\pi/3}$ we have $W^3 = 1$ and $W + W^2 = -1$. So $Y[0] = 1 + 2 + 2 + 4 = 9$ and $Y[1] = 1 + 2W + 2W^2 + 4W^3 = 5 + 2(W + W^2) = 3$. In the same way $Y[2] = 1 + 2W^2 +$

$2W^4 + 4W^6 = 5 + 2(W^2 + W) = 3$. Then $y[0] = \frac{1}{3}(9 + 3 + 3) = 5$.

KEY IDEA

Taking N samples of a DTFT and inverting them with an N-point IDFT gives the time-aliased sequence $y[n] = \sum_r x[n + rN]$. Here the sequence has 4 samples and $N = 3$, so $x[3]$ folds back onto $n = 0$.

WATCH OUT FOR

Answering $y[0] = x[0] = 1$ treats the 3-point DFT as though it simply cut off $x[3]$. That is wrong because $N = 3$ is less than the sequence length 4, so the time-domain aliasing puts $x[3]$ on top of $x[0]$. A second slip is to take $y[0]$ as $Y[0] = 9$, the sum of all the samples. $Y[0]$ is a frequency-domain value; $y[0]$ is the average of the three $Y[k]$.

Q.55 NAT · 2 MARKS

Q.55 A schematic of a Michelson interferometer, used for the measurement of refractive index of gas, is shown in the figure. The transparent chamber is filled with a gas of refractive index n_g, where $n_g \neq 1$, at atmospheric pressure. If a 532 nm laser beam produces 30 interference fringes on the screen, then the number of fringes produced by a 632.8 nm laser beam will be _____ **(rounded off to one decimal place).**

Note: Assume that the effect of beamsplitter width is negligible. The setup is placed in air medium with refractive index equal to 1.

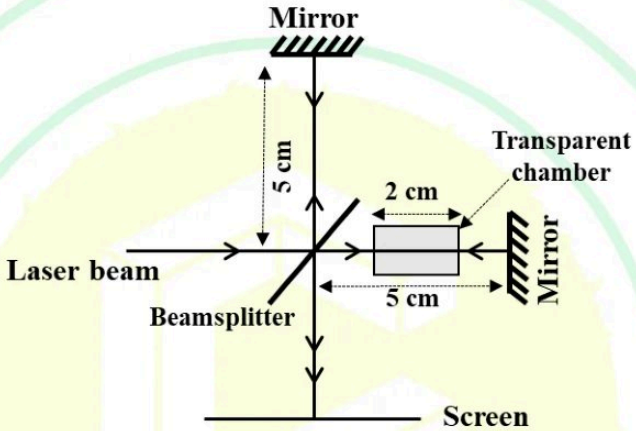

Official answer: **24.5 to 25.5**

SOLUTION

1. The beam crosses the gas chamber twice (to the right-hand mirror and back), so the gas adds an optical path $\Delta = 2L(n_g - 1)$ compared with the same length of air, with $L = 2\ \text{cm}$. The two arms are otherwise identical in length and the beamsplitter width is neglected, so nothing else changes.
2. The fringe count is the extra path divided by the wavelength: $N = \dfrac{2L(n_g - 1)}{\lambda}$.

3. For $\lambda_1 = 532\ \text{nm}$ and $N_1 = 30$: $n_g - 1 = \dfrac{30 \times 532 \times 10^{-9}}{2 \times 0.02} = 3.99 \times 10^{-4}$.
4. Take n_g to be the same at 632.8 nm (dispersion neglected). The path change $2L(n_g - 1)$ is then unchanged, so $N \propto \dfrac{1}{\lambda}$.
5. $N_2 = N_1 \dfrac{\lambda_1}{\lambda_2} = 30 \times \dfrac{532}{632.8} \approx 25.22$.
6. Rounded to one decimal place, $N_2 \approx 25.2$ fringes.

KEY IDEA

The number of fringes shifted equals the extra optical path from the gas, $2L(n_g - 1)$, divided by the wavelength. With the gas and chamber unchanged, the count varies inversely with wavelength, so you do not need to find n_g.

WATCH OUT FOR

Using a single pass, $L(n_g - 1)$, instead of the double pass $2L(n_g - 1)$. The factor cancels in the ratio here, but it gives a wrong n_g. Another slip is to invert the ratio and get $30 \times 632.8/532 \approx 35.7$.

Q.56 NAT · 2 MARKS

Q.56 Consider an AC bridge shown in the figure with $R = 300\,\Omega$, $R1 = 1000\,\Omega$, $R2 = 500\,\Omega$, $L = 30\,\text{mH}$, and a detector D. At the bridge balance condition, the frequency of the excitation source V_S is _____ kHz **(rounded off to two decimal places).**

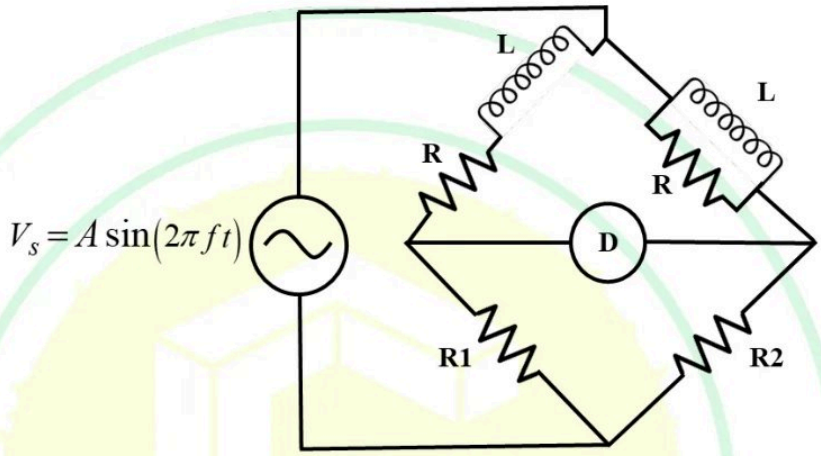

GATE 2025 IIT Roorkee

Official answer: **1.55 to 1.65**

SOLUTION

1. Name the arms (top, left, right and bottom vertices of the diamond). Top-left arm, series R and L: $Z_1 = R + j\omega L$. Top-right arm, R in parallel with L: $Z_2 = \dfrac{j\omega LR}{R + j\omega L}$. Bottom-left arm: R_1. Bottom-right arm: R_2. The source is across the top and bottom vertices, and D is across the left and right vertices.

2. Balance condition: D carries no current when the left and right vertices are at the same potential, i.e. $\frac{R_1}{Z_1 + R_1} = \frac{R_2}{Z_2 + R_2}$, which simplifies to $Z_1 R_2 = Z_2 R_1$ (products of opposite arms equal). Hence $\frac{Z_1}{Z_2} = \frac{R_1}{R_2} = \frac{1000}{500} = 2$.
3. Form the ratio:

$$\frac{Z_1}{Z_2} = \frac{(R + j\omega L)^2}{j\omega LR} = \frac{R^2 - \omega^2 L^2 + j\,2\omega LR}{j\omega LR} = 2 - j\,\frac{R^2 - \omega^2 L^2}{\omega LR}$$

4. Equate this to $2 + j0$. The real part is already 2, so the resistance-ratio condition holds at every frequency. The imaginary part must vanish: $R^2 = \omega^2 L^2$, so (taking the positive root) $\omega L = R$.
5. $$\omega = \frac{R}{L} = \frac{300}{30 \times 10^{-3}} = 10^4 \text{ rad/s}$$
6. $$f = \frac{\omega}{2\pi} = \frac{10^4}{2\pi} = 1591.55 \text{ Hz} \approx 1.59 \text{ kHz}$$

KEY IDEA

With a series RL arm Z_1 and a parallel RL arm Z_2 made of the same R and L, $Z_1/Z_2 = (R + j\omega L)^2/(j\omega LR)$ always has real part 2. The resistor ratio $R_1/R_2 = 2$ therefore holds at every frequency, and balance only needs the imaginary part to vanish, which gives $\omega L = R$. The bridge balances at only one frequency, so it can be used to measure frequency.

WATCH OUT FOR

Reading the top-right arm as a second series RL branch: then $Z_1 = Z_2$, the ratio is 1 rather than 2, and the bridge can never balance. Other slips: pairing adjacent arms ($Z_1 R_1 = Z_2 R_2$), which gives a ratio of 1/2 that the real part 2 can never match; stopping at $\omega = 10^4$ rad/s without dividing by 2π; and entering 1591.55 (in Hz) when the question asks for kHz.

Q.57 NAT · 2 MARKS

Electromagnetics › Electrostatics

Q.57

An air filled parallel plate electrostatic actuator is shown in the figure. The area of each capacitor plate is $100\ \mu m \times 100\ \mu m$. The distance between the plates $d_0 = 1\ \mu m$ when both the capacitor charge and spring restoring force are zero as shown in Figure (a). A linear spring of constant $k = 0.01$ N/m is connected to the movable plate. When charge is supplied to the capacitor using a current source, the top plate moves as shown in Figure (b). The magnitude of minimum charge (Q) required to momentarily close the gap between the plates is _____$\times 10^{-14}$ C **(rounded off to two decimal places).**

Note: Assume a full range of motion is possible for the top plate and there is no fringe capacitance. The permittivity of free space is $\varepsilon_o = 8.85 \times 10^{-12}$ F/m and relative permittivity of air (ε_r) is 1.

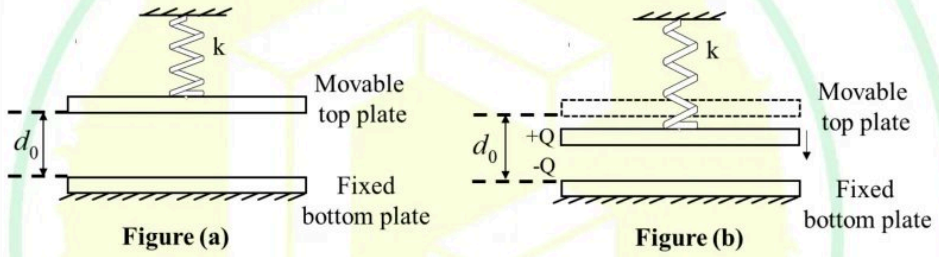

Official answer: **4.00 to 4.40**

SOLUTION

1. Plate area and the product we need: $A = (100 \times 10^{-6}\ \text{m})^2 = 10^{-8}\ \text{m}^2$. With $\varepsilon_0 = 8.85 \times 10^{-12}\ \text{F/m}$ and $\varepsilon_r = 1$, $\varepsilon_0 A = 8.85 \times 10^{-12} \times 10^{-8} = 8.85 \times 10^{-20}\ \text{F} \cdot \text{m}$.
2. A current source sets the charge Q on the plates, not the voltage, so this is charge control. At fixed Q the stored energy is $W = \dfrac{Q^2}{2C} = \dfrac{Q^2 x}{2\varepsilon_0 A}$, using $C = \dfrac{\varepsilon_0 A}{x}$ with no fringing, where x is the gap.

3. Force from virtual work at constant charge: $F_e = -\dfrac{\partial W}{\partial x}\Big|_Q = -\dfrac{Q^2}{2\varepsilon_0 A}$. The minus sign means it acts to shrink the gap (attraction), and its size **does not depend on the gap**. Check: the top plate sits in the field of the bottom plate alone, $E = \dfrac{\sigma}{2\varepsilon_0}$ with $\sigma = \dfrac{Q}{A}$, so $F = Q \cdot \dfrac{\sigma}{2\varepsilon_0} = \dfrac{Q^2}{2\varepsilon_0 A}$.
4. Spring: once the top plate has moved down by y, the spring pulls it back with $F_s = ky$ (Hooke's law), and this grows as the gap closes. The current source adds charge gradually, so the plate moves slowly through equilibrium positions with $\dfrac{Q^2}{2\varepsilon_0 A} = ky$ at every instant. Because F_e does not depend on the gap, there is no pull-in instability: the plate reaches the bottom plate ($y = d_0$) only when the electrostatic force equals the largest spring force, kd_0.
5. Condition for the gap to just close: $\dfrac{Q^2}{2\varepsilon_0 A} = kd_0 \;\Rightarrow\; Q = \sqrt{2\varepsilon_0 A\, k\, d_0}$.
6. Substitute $k = 0.01\ \text{N/m}$ and $d_0 = 10^{-6}\ \text{m}$ (so $kd_0 = 10^{-8}\ \text{N}$):
$$Q = \sqrt{2 \times 8.85 \times 10^{-20} \times 0.01 \times 10^{-6}} = \sqrt{1.77 \times 10^{-27}} = 4.207 \times 10^{-14}\ \text{C}$$
7. To two decimal places, $Q \approx 4.21 \times 10^{-14}\ \text{C}$, so the blank is 4.21.

KEY IDEA

A current source fixes the charge, not the voltage. With charge fixed, the pull between the plates is $\dfrac{Q^2}{2\varepsilon_0 A}$ whatever the gap. The spring's pull-back ky grows as the gap closes and is largest at contact, kd_0. So the gap closes when $\dfrac{Q^2}{2\varepsilon_0 A} = kd_0$.

WATCH OUT FOR

Using the voltage-drive result. At fixed voltage the force $\dfrac{\varepsilon_0 A V^2}{2x^2}$ grows as the gap shrinks, which gives the familiar pull-in at one third of the gap. Setting the balance at $y = d_0/3$ gives $Q \approx 2.43 \times 10^{-14}\ \text{C}$, which is wrong here: at fixed charge the force is constant and there is no pull-in. A second trap is treating the charge as switched on suddenly. A constant force applied in one step makes the plate overshoot to twice its equilibrium displacement, which gives $Q = \sqrt{\varepsilon_0 A k d_0} \approx 2.97 \times 10^{-14}\ \text{C}$. A current source builds the charge up gradually, so there is no overshoot.

Q.58 NAT · 2 MARKS

Sensors and Industrial Instrumentation › Temperature

The resistance of a thermistor is measured to be 2.25 kΩ at 30 °C and 1.17 kΩ at 60 °C. Its material constant β is _____ K (rounded off to two decimal places).

Official answer: **2160 to 2210**

SOLUTION

1. Use the NTC thermistor law with absolute temperatures: $R_T = R_0\, e^{\beta\left(\frac{1}{T} - \frac{1}{T_0}\right)}$.
2. Convert: $T_1 = 30 + 273.15 = 303.15\ \text{K}$ and $T_2 = 60 + 273.15 = 333.15\ \text{K}$, with $R_1 = 2.25\ \text{k}\Omega$ at T_1 and $R_2 = 1.17\ \text{k}\Omega$ at T_2.
3. Write the law for each temperature and divide: $\dfrac{R_1}{R_2} = e^{\beta\left(\frac{1}{T_1} - \frac{1}{T_2}\right)}$. The reference resistance cancels, so only the ratio of the two readings is needed.
4. Take natural logs: $\beta = \dfrac{\ln(R_1/R_2)}{\frac{1}{T_1} - \frac{1}{T_2}}$.
5. Numerator: $\ln\left(\dfrac{2.25}{1.17}\right) = \ln 1.9231 = 0.65393$.
6. Denominator: $\dfrac{1}{303.15} - \dfrac{1}{333.15} = \dfrac{30}{303.15 \times 333.15} = 2.9705 \times 10^{-4}\ \text{K}^{-1}$.
7. $$\beta = \frac{0.65393}{2.9705 \times 10^{-4}} \approx 2201.43\ \text{K}$$

KEY IDEA

For an NTC thermistor, $R_1/R_2 = e^{\beta(1/T_1 - 1/T_2)}$ with temperatures in kelvin, so $\beta = \ln(R_1/R_2)/(1/T_1 - 1/T_2)$. Two resistance readings are enough, and the reference resistance cancels.

WATCH OUT FOR

Using Celsius temperatures in the exponent instead of kelvin, or inverting the ratio so the sign of β comes out wrong (the higher resistance belongs to the lower temperature). Using 273 instead of 273.15 shifts the answer by a few kelvin, which is why the key is a range.

Q.59 NAT · 2 MARKS

Control Systems › Time response

Q.59 A feedback control system is shown in the figure.

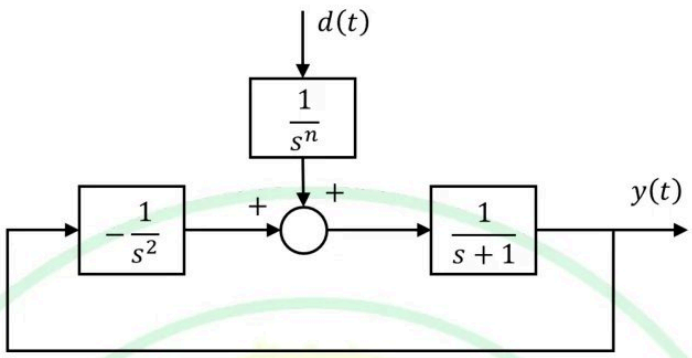

The maximum allowable value of n such that the output $y(t)$, due to any step disturbance signal $d(t)$, becomes zero at steady-state, is _____ **(in integer).**

GATE 2025 IIT Roorkee

Official answer: **Marks to all**

SOLUTION

1. **Loop equation.** The junction adds $D(s)/s^n$ and $-\frac{1}{s^2}Y(s)$, and its output passes through $\frac{1}{s+1}$:

$$Y(s) = \frac{1}{s+1}\left[\frac{D(s)}{s^n} - \frac{1}{s^2}Y(s)\right]$$

The $-1/s^2$ block feeding a $+$ input is ordinary negative feedback with $H(s) = 1/s^2$.

2. **Disturbance-to-output transfer function.** Collect the $Y(s)$ terms and multiply numerator and denominator by $s^2(s+1)$:

$$\frac{Y(s)}{D(s)} = \frac{\dfrac{1}{s^n(s+1)}}{1+\dfrac{1}{s^2(s+1)}} = \frac{s^{2-n}}{s^3+s^2+1}$$

3. **Check stability before using the final value theorem.** The characteristic polynomial is $s^3+s^2+0\cdot s+1$. Its s coefficient is zero, so it fails the necessary condition for stability. Routh array:

$$\begin{aligned} s^3 &: \ 1 \quad 0 \\ s^2 &: \ 1 \quad 1 \\ s^1 &: \ \frac{1\cdot 0 - 1\cdot 1}{1} = -1 \\ s^0 &: \ 1 \end{aligned}$$

   The first column $1, 1, -1, 1$ changes sign twice, so there are two right-half-plane poles. The roots are $s \approx -1.466$ and $s \approx 0.233 \pm j0.793$.

4. **What this means for $y(t)$.** A step disturbance $D(s) = A/s$ ($A \neq 0$) gives

$$Y(s) = \frac{A\, s^{1-n}}{s^3+s^2+1}$$

   The numerator is just a power of s, so it can never cancel the poles at $0.233 \pm j0.793$. So $y(t)$ always contains a term that grows like $e^{0.233t}\sin(0.793t+\phi)$ with a nonzero coefficient. Strictly, $y(t)$ grows without bound for **every** n, and no value of n makes it settle to zero. The question is flawed as printed.

5. **The method the question intends (final value theorem applied formally).**

$$y_{ss} = \lim_{s\to 0} sY(s) = \lim_{s\to 0} \frac{A\, s^{2-n}}{s^3+s^2+1} = \lim_{s\to 0} A\, s^{2-n}$$

   because the denominator tends to 1. This limit is zero only if $2-n>0$, that is $n<2$.

6. **Test the boundary values formally.** $n=1$: $\lim A\, s = 0$. $n=2$: $\lim A = A \neq 0$. $n \geq 3$: $A\, s^{2-n} \to \infty$. Every $n \leq 1$ gives zero, so the largest allowed integer is $n=1$.

7. **Conclusion.** The intended answer, from applying the final value theorem formally, is $n=1$. Strictly speaking, the closed loop s^3+s^2+1 is unstable, so the theorem does not apply and no n satisfies the condition. The official key is MTA, so neither reading can lose marks.

KEY IDEA

Rejecting a step disturbance needs the disturbance-to-output transfer function to have at least one zero at the origin. Here the loop's feedback $1/s^2$ puts s^2 in the numerator of Y/D, and the disturbance path's $1/s^n$ removes n of those zeros. That leaves s^{2-n}, and a step (one more $1/s$) is rejected only if $2-n \geq 1$. A second rule matters just as much: the final value theorem only holds for a stable closed loop, so do a Routh check first. Here it fails, because s^3+s^2+1 has no s term.

WATCH OUT FOR

(1) Using the final value theorem without checking stability. The characteristic polynomial s^3+s^2+1 has a missing coefficient, so the loop is unstable and the theorem's result is only formal. (2) Answering $n=2$ by asking only for a finite steady state ($2-n \geq 0$) rather than a zero one ($2-n>0$). (3) Reading the $-1/s^2$ block going into a $+$ junction as positive feedback. That gives s^3+s^2-1, which is also unstable, so it changes the algebra but not the formal answer.

Q.60 NAT · 2 MARKS

Networks (Electric Circuits) › Coupled circuits

Q.60

The circuit given in the figure is driven by a voltage source $V_s = 25\sqrt{2}\angle 30°$ V. The system is operating at a frequency of 50 Hz. The transformers are assumed to be ideal. The average power dissipated, in W, in the 50 kΩ resistance is _____ **(rounded off to two decimal places).**

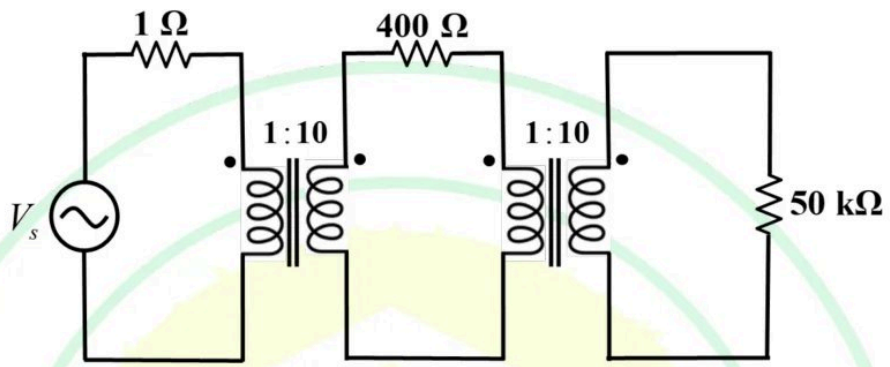

Official answer: **31.00 to 31.50**

SOLUTION

1. **Reflect the load through T2.** An ideal $1 : n$ transformer makes an impedance Z on its secondary look like Z/n^2 from its primary. With $n = 10$:

$$R'_L = \frac{50\ \text{k}\Omega}{10^2} = 500\ \Omega$$

The dot positions change only the sign of the transferred voltage and current, not their magnitudes, so they do not affect power.

2. **Middle loop.** The T1 secondary now sees $400\ \Omega + 500\ \Omega = 900\ \Omega$ in series.
3. **Reflect through T1.** $R'' = \dfrac{900}{10^2} = 9\ \Omega$, so the source sees $R_{in} = 1 + 9 = 10\ \Omega$. The network is purely resistive, so neither the 50 Hz frequency nor the 30° angle affects the power.
4. **Source magnitude.** The phasor is written as $25\sqrt{2}\angle 30^\circ$ V. The $\sqrt{2}$ marks $25\sqrt{2}$ V as the peak value (amplitude), so $V_{rms} = \dfrac{25\sqrt{2}}{\sqrt{2}} = 25$ V. The official key uses this reading. Taking $25\sqrt{2}$ V as the rms value would give 62.50 W, which is outside the key.
5. **Primary current.** $I_{1,rms} = \dfrac{V_{rms}}{R_{in}} = \dfrac{25}{10} = 2.5$ A.
6. **Power delivered past the $1\ \Omega$ resistor.** Ideal transformers are lossless, so the power into the reflected $9\ \Omega$ equals the power into the $900\ \Omega$ middle loop:
$$P_9 = I_{1,rms}^2 \times 9 = 6.25 \times 9 = 56.25\ \text{W}$$
7. **Split between the $400\ \Omega$ and the reflected $500\ \Omega$.** Both carry the same current, so the power divides in proportion to resistance:
$$P_{50\text{k}} = 56.25 \times \frac{500}{900} = 31.25\ \text{W}$$
The reflected $500\ \Omega$ stands for the $50\ \text{k}\Omega$ load, and T2 is lossless, so this is the power dissipated in the $50\ \text{k}\Omega$ resistor.
8. **Check with currents.** Each $1:10$ step-up divides the current by 10. The middle-loop current is $I_2 = I_1/10 = 0.25$ A, and the load current is $I_3 = I_2/10 = 0.025$ A. Then
$$P_{50\text{k}} = 0.025^2 \times 50\,000 = 31.25\ \text{W}$$

KEY IDEA

Reflect each resistance back toward the source by dividing by n^2 at every ideal 1:n step-up transformer. That turns the whole network into a single 10 Ω load on a 25 V rms source. Ideal transformers are lossless, so the power that reaches the reflected 500 Ω is exactly the power in the 50 kΩ resistor.

WATCH OUT FOR

Three mistakes are common. (1) Reading 25√2 V as the rms value, which doubles the answer to 62.50 W. The √2 means it is the peak value, so V_rms = 25 V. (2) Reflecting the wrong way, multiplying by n^2 instead of dividing, when moving an impedance from the high-turns side to the low-turns side. (3) Forgetting the 400 Ω resistor in the middle loop, which takes 400/900 of the power that gets past the 1 Ω resistor.

Q.61 NAT · 2 MARKS

Networks (Electric Circuits) › Theorems

Q.61 In the circuit shown, the galvanometer (G) has an internal resistance of 100 Ω. The galvanometer current I_G is _____ μA **(rounded off to the nearest integer).**

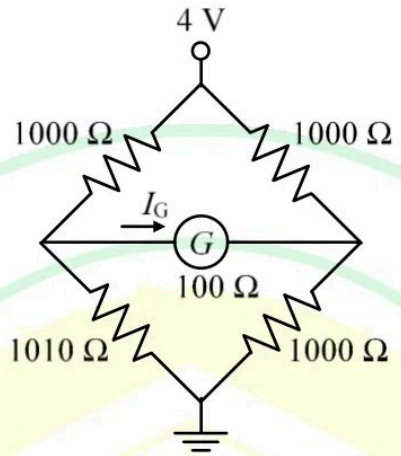

GATE 2025 IIT Roorkee

Official answer: **9**

SOLUTION

1. Label the left mid-node A (between the 1000 Ω and 1010 Ω resistors) and the right mid-node B (between the two 1000 Ω resistors). Remove G and find the Thevenin equivalent seen across A-B.
2. Voltage divider on the left arm: $V_A = 4 \times \dfrac{1010}{1000 + 1010} = \dfrac{4040}{2010} \approx 2.00995\ \text{V}$.
3. Voltage divider on the right arm: $V_B = 4 \times \dfrac{1000}{1000 + 1000} = 2\ \text{V}$.

4. Open-circuit (Thevenin) voltage: $V_{th} = V_A - V_B = \dfrac{4040 - 4020}{2010} = \dfrac{2}{201}\ \text{V} \approx 9.950\ \text{mV}$. A is the positive terminal, so the current flows from A to B through G, the same direction as the arrow; I_G is positive.
5. Thevenin resistance: replace the 4 V source by a short, so the top and bottom vertices are both at ground. Then from A the two left resistors are in parallel, and from B the two right resistors are in parallel: $R_{th} = (1000 \parallel 1010) + (1000 \parallel 1000) = \dfrac{1000 \times 1010}{2010} + 500 = 502.49 + 500 = 1002.49\ \Omega$ (exactly $\dfrac{201500}{201}\ \Omega$).
6. Reconnect G (100 Ω) across the Thevenin equivalent:
$$I_G = \frac{V_{th}}{R_{th} + R_G} = \frac{2/201}{\frac{201500}{201} + 100} = \frac{2/201}{\frac{221600}{201}} = \frac{2}{221600}\ \text{A} \approx 9.025\ \mu\text{A}$$
7. Rounded off to the nearest integer: $I_G \approx 9\ \mu\text{A}$.

KEY IDEA

A slightly unbalanced Wheatstone bridge with a galvanometer of finite resistance is solved with Thevenin's theorem. Remove G. The open-circuit voltage between the two mid-nodes is the difference between the two voltage dividers. With the source shorted, the Thevenin resistance is (upper-left ∥ lower-left) + (upper-right ∥ lower-right). Then $I_G = V_{th}/(R_{th} + R_G)$.

WATCH OUT FOR

Using $I_G = V_{th}/R_G$ gives about 99.5 µA because it leaves out the bridge's own Thevenin resistance of about 1002.5 Ω. Another common error is to put the arm resistors in series (1000 + 1010) instead of in parallel when finding R_{th}: once the source is shorted, the top and bottom vertices are the same node. Rounding V_A to 2.01 V too early gives V_{th} = 10 mV and about 9.07 µA. That still rounds to 9 here, but on a tighter question the lost precision would matter.

Q.62 NAT · 2 MARKS

Electrical and Electronic Measurements › Errors & standards

A series RLC circuit resonates at 7500 rad/s for inductance $L = 20\ \text{mH}$ and resistance $R = 10\ \Omega$. The uncertainties in the measurement of L and R are $0.8\ \text{mH}$ and $0.3\ \Omega$, respectively. The percentage uncertainty in the measurement of quality factor is _____ % (rounded off to one decimal place).

Official answer: **4.5 to 5.5**

SOLUTION

1. The quality factor of a series RLC circuit at resonance is $Q = \dfrac{\omega_0 L}{R}$. The resonant frequency $\omega_0 = 7500\ \text{rad/s}$ is given as a fixed value; only L and R are measured with uncertainty. The nominal value is $Q = \dfrac{7500 \times 0.02}{10} = 15$.
2. Relative uncertainty of each measured quantity: $\dfrac{\delta L}{L} = \dfrac{0.8\ \text{mH}}{20\ \text{mH}} = 0.04 = 4\%$ and $\dfrac{\delta R}{R} = \dfrac{0.3\ \Omega}{10\ \Omega} = 0.03 = 3\%$.
3. Since $Q = k\,L^{1}R^{-1}$ with $k = \omega_0$ constant, $\ln Q = \ln k + \ln L - \ln R$. The sensitivity of $\ln Q$ to $\ln L$ is $+1$ and to $\ln R$ is -1, so each relative uncertainty passes into Q with weight 1 (the sign does not matter once it is squared).
4. Independent uncertainties combine by root-sum-square (the Kline–McClintock rule):
$$\frac{\delta Q}{Q} = \sqrt{\left(\frac{\delta L}{L}\right)^2 + \left(\frac{\delta R}{R}\right)^2} = \sqrt{(4\%)^2 + (3\%)^2} = \sqrt{25}\,\% = 5\%$$
5. So the uncertainty in Q is $\pm 0.05 \times 15 = \pm 0.75$, and the percentage uncertainty in the quality factor is 5.0%.

KEY IDEA

For a product or quotient of independent measured quantities, you find the uncertainty of the result by adding the relative uncertainties in quadrature (root-sum-square), each one weighted by its power. With $Q = \omega_0 L/R$ and ω_0 given as fixed, both L and R enter with power ± 1, so $\delta Q/Q = \sqrt{4^2 + 3^2}\,\% = 5\%$.

WATCH OUT FOR

Adding the relative errors linearly, $4\% + 3\% = 7\%$. That is the worst-case (limiting) error. An 'uncertainty' in independent measurements is combined by root-sum-square, which gives 5%. Another slip is to treat the capacitor as the fixed element and use $Q = \frac{1}{R}\sqrt{L/C}$, so that L gets weight $\frac{1}{2}$. The question gives ω_0 as a fixed number, so $Q = \omega_0 L/R$ is the relation to use.

Q.63 NAT · 2 MARKS

Networks (Electric Circuits) › Transients

Q.63	In the circuit shown, the switch is opened at $t = 0$ s. The current $i(t)$ at $t = 2$ ms is _____ mA **(rounded off to two decimal places).**
	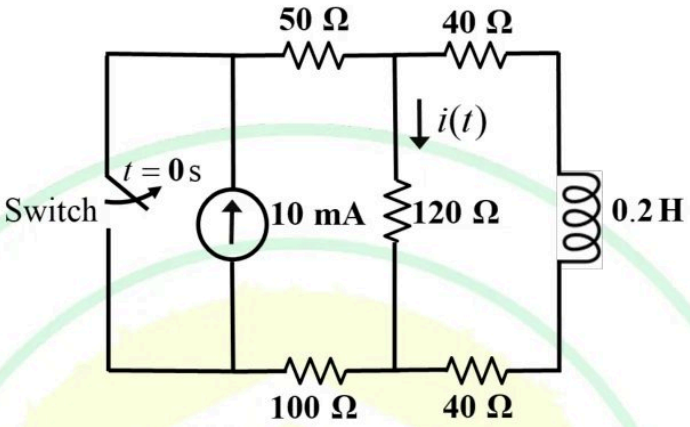

GATE 2025 IIT Roorkee

Official answer: **4.60 to 5.00**

SOLUTION

1. **Before the switch opens ($t < 0$):** the closed switch shorts the 10 mA source, so all of the source current flows through the switch. No source drives the rest of the network, so in steady state every current in it is zero: $i_L(0^-) = 0$.
2. **Continuity of inductor current:** $i_L(0^+) = i_L(0^-) = 0$, so the inductor acts as an open circuit at $t = 0^+$.

3. **Circuit for $t > 0$:** with the switch open, the 10 mA source is in series with the 50 Ω and 100 Ω resistors. An ideal current source fixes the current in its series path, so these two resistors do not affect the split: exactly 10 mA enters node B and leaves node C. Between B and C there are two parallel paths: the 120 Ω resistor, and the series path $40\,\Omega + 0.2\,\mathrm{H} + 40\,\Omega$.
4. **Initial value:** since $i_L(0^+) = 0$, all of the 10 mA goes through the 120 Ω resistor, so $i(0^+) = 10\,\mathrm{mA}$.
5. **Final value (inductor as a short circuit, current division):**
$$i(\infty) = 10\,\mathrm{mA} \times \frac{40 + 40}{120 + 40 + 40} = 10 \times \frac{80}{200} = 4\,\mathrm{mA}$$
6. **Time constant:** open-circuit the current source and find the resistance the inductor sees. The 50 Ω and 100 Ω resistors are left on an open branch and drop out, so $R_{eq} = 40 + 120 + 40 = 200\,\Omega$ and
$$\tau = \frac{L}{R_{eq}} = \frac{0.2}{200} = 1\,\mathrm{ms}$$
7. **First-order response:**
$$i(t) = i(\infty) + \left[i(0^+) - i(\infty)\right] e^{-t/\tau} = 4 + 6\,e^{-t/(1\,\mathrm{ms})}\ \mathrm{mA}$$
Check: the inductor current is $i_L(t) = 6\left(1 - e^{-t/\tau}\right)\ \mathrm{mA}$, and KCL at node B gives $i = 10 - i_L = 4 + 6e^{-t/\tau}\,\mathrm{mA}$, the same expression.
8. **At $t = 2\,\mathrm{ms}$:**
$$i = 4 + 6e^{-2} = 4 + 6(0.13534) = 4 + 0.81201 \approx 4.81\,\mathrm{mA}$$

KEY IDEA

When the switch opens, the ideal 10 mA source is forced to drive a single RL network. The 50 Ω and 100 Ω resistors in series with the source affect neither how the current splits nor the time constant. The current splits between 120 Ω and the path 40 Ω + L + 40 Ω: all of it goes through 120 Ω at $t = 0^+$, because the inductor starts with zero current, and it settles to the resistive current-division value. The inductor sees $40 + 120 + 40 = 200\,\Omega$, so $\tau = L/R = 1\,\mathrm{ms}$.

WATCH OUT FOR

Counting the 50 Ω and 100 Ω resistors in the time constant (e.g. $R = 40 + 40 + 120 + 50 + 100$), or shorting the current source instead of opening it when finding R_{eq}. Opening the source leaves those resistors on an open branch, so they drop out. Another slip is taking $i(0^+) = 0$ by treating the 120 Ω resistor's current as continuous. Only the inductor current is continuous; the resistor current jumps from 0 to 10 mA at $t = 0^+$.

Q.64 NAT · 2 MARKS

Networks (Electric Circuits) › Transients

Q.64

A signal $V_M = 5\sin(\pi t/3)$ V is applied to the circuit consisting of a switch S and capacitor $C = 0.1$ μF, as shown in the figure. The output V_x of the circuit is fed to an ADC having an input impedance consisting of a 10 MΩ resistance in parallel with a 0.1 μF capacitor. If S is opened at $t = 0.5$ s, the value of V_x at $t = 1.5$ s will be _____ V **(rounded off to two decimal places)**.

Note: Assume all components are ideal.

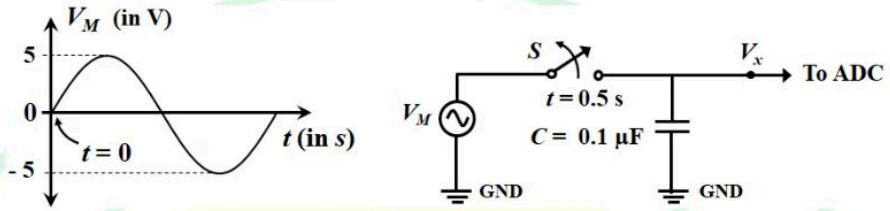

Official answer: **1.50 to 1.54**

SOLUTION

1. **While S is closed ($t < 0.5$ s).** The ideal source (zero internal resistance) is connected directly across C and across the ADC input ($10\ \text{M}\Omega \parallel 0.1\ \mu\text{F}$). Nothing sits between the source and the node, so the node voltage is forced to follow the source exactly: $V_x(t) = V_M(t)$.
2. **Voltage at the instant of switching.** The argument of the sine is in radians:

$$V_x(0.5^-) = 5\sin\left(\frac{\pi \times 0.5}{3}\right) = 5\sin\frac{\pi}{6} = 5 \times 0.5 = 2.5\ \text{V}$$

Both capacitors (C and the ADC's $0.1\ \mu\text{F}$) are charged to $2.5\ \text{V}$.

3. **Continuity of capacitor voltage.** A capacitor voltage cannot change instantly, so $V_x(0.5^+) = V_x(0.5^-) = 2.5\ \text{V}$. The two capacitors are at the same voltage when S opens, so no charge moves between them.
4. **Circuit for $t > 0.5$ s (source-free RC).** With S open the source is disconnected. What remains is $C = 0.1\ \mu\text{F}$, the ADC's $0.1\ \mu\text{F}$ and the ADC's $10\ \text{M}\Omega$, all in parallel between the node and GND. The two capacitors in parallel give
$$C_{eq} = 0.1 + 0.1 = 0.2\ \mu\text{F}$$
5. **Time constant.**
$$\tau = R\,C_{eq} = (10 \times 10^6\ \Omega)(0.2 \times 10^{-6}\ \text{F}) = 2\ \text{s}$$
6. **Natural (exponential) decay, measured from the switching instant.**
$$V_x(t) = 2.5\,e^{-(t-0.5)/2}\ \text{V}, \quad t \geq 0.5\ \text{s}$$
7. **At $t = 1.5$ s.**
$$V_x(1.5) = 2.5\,e^{-(1.5-0.5)/2} = 2.5\,e^{-0.5} = 2.5 \times 0.6065 = 1.516\ \text{V} \approx 1.52\ \text{V}$$

KEY IDEA

While S is closed, the ideal source holds the node at $V_M(t)$. When S opens at $t = 0.5$ s, the node starts at $5\sin(\pi/6) = 2.5$ V and discharges through the ADC's $10\ \text{M}\Omega$. The ADC's own $0.1\ \mu\text{F}$ is in parallel with C, so $\tau = R(C + C_{ADC}) = 10\ \text{M}\Omega \times 0.2\ \mu\text{F} = 2$ s.

WATCH OUT FOR

The most common slip is leaving out the ADC's input capacitance. That gives $\tau = 1$ s and $V_x = 2.5e^{-1} \approx 0.92$ V. Other slips:
(a) starting the decay from the peak value 5 V instead of the instantaneous value $5\sin(\pi/6) = 2.5$ V;
(b) evaluating $\sin(0.5\pi/3)$ as if the angle were in degrees;
(c) measuring the decay from $t = 0$ instead of from the switching instant, which gives $2.5e^{-1.5/2} \approx 1.18$ V.

Q.65 NAT · 2 MARKS

Networks (Electric Circuits) › AC, power & resonance

Q.65 For the circuit shown in the figure, the active power supplied by the source is _____ W **(rounded off to one decimal place).**

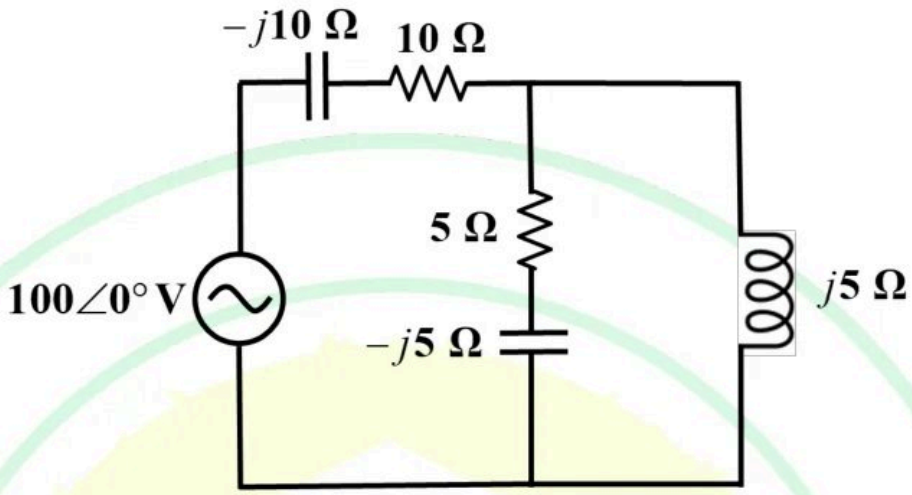

Official answer: **590 to 610**

SOLUTION

1. Read the circuit as one series loop. The source drives $-j10\ \Omega$ and $10\ \Omega$ in series with a parallel pair between node A and the bottom wire. The pair is $(5 - j5)\ \Omega$ in parallel with $j5\ \Omega$.
2. Combine the parallel pair with the product-over-sum rule:
$$Z_p = \frac{(5 - j5)(j5)}{(5 - j5) + j5} = \frac{25 + j25}{5} = 5 + j5\ \Omega$$
3. Add the series elements to get the total impedance seen by the source: $Z = 10 - j10 + 5 + j5 = 15 - j5\ \Omega$, so $|Z|^2 = 15^2 + 5^2 = 250$.
4. Apply Ohm's law in phasor form:
$$I = \frac{100\angle 0°}{15 - j5} = \frac{100\,(15 + j5)}{250} = 6 + j2\ \text{A}$$
so $|I|^2 = 36 + 4 = 40$.
5. Compute the complex power delivered by the source:
$$S = VI^* = 100\,(6 - j2) = 600 - j200\ \text{VA}$$
This gives $P = \text{Re}(S) = 600\ \text{W}$. Equivalently, $P = |I|^2\,\text{Re}(Z) = 40 \times 15 = 600\ \text{W}$. The source phasor is taken as rms, the usual GATE convention.
6. Check by adding up the power absorbed in each resistor. $V_A = IZ_p = (6 + j2)(5 + j5) = 20 + j40\ \text{V}$. The $5\ \Omega$ branch carries $I_5 = \frac{20 + j40}{5 - j5} = \frac{(20 + j40)(5 + j5)}{50} = -2 + j6\ \text{A}$, so $|I_5|^2 = 40$. The resistors

absorb $40 \times 10 + 40 \times 5 = 400 + 200 = 600$ W. This matches the source power, so the answer is 600.0 W.

KEY IDEA

Reduce the network to one impedance seen by the source, $Z = 15 - j5\ \Omega$. The active power is $\mathrm{Re}(VI^*)$, which equals $|I|^2\mathrm{Re}(Z)$. Only resistors absorb active power, so adding $|I|^2R$ over the two resistors checks the answer independently.

WATCH OUT FOR

One slip is to report the apparent power $|V||I| = 100\sqrt{40} \approx 632.5$ VA, or to use VI without conjugating the current. Another is to treat $100\angle 0^\circ$ as a peak value and halve the result to 300 W. GATE phasors are rms unless the question says otherwise. A third is to use the source current for the $5\ \Omega$ resistor. That resistor carries only its branch current, $|I_5|^2 = 40$, which here happens to have the same magnitude as the source current.

FROM IAE ACADEMY

Preparing for GATE IN?

IAE Academy teaches GATE IN in Ballygunge, Kolkata, and online. Counselling is free: ask us about batches, fees or your preparation.

FREE COUNSELLING

Chat on WhatsApp

Call +91 84204 36524

Open every day, 10:30 am to 7:30 pm.

Scan to chat on WhatsApp

THE GATE IN COURSE

Classroom batches in Ballygunge and online batches. Fees and details are on the course page.

Scan: course page

See the course

FREE ON IAEACADEMY.IN

More GATE IN papers, question by question with the official answers, and free notes by subject.

Scan: more papers

More solved papers

Found this useful? Send it to a friend preparing for GATE.

Send to a friend on WhatsApp

IAE Academy free study material. The questions are those of the GATE IN 2025 question paper, organised by IIT Roorkee; the answers are from its official answer key. Prepared and published by IAE Academy, Kolkata. Free to read and free to share, unaltered and with attribution. Not affiliated with, endorsed by or produced by IIT Roorkee or the GATE committee.

IAE ACADEMY INSTITUTE FOR ENGINEERS

GATE coaching in Kolkata since 2012 · EC, EE, IN, CS and IT, DA, BT and CE · in the classroom and online

227A Rash Behari Ave, Ballygunge, Kolkata 700019

+91 84204 36524 · iaeacademy.in · Updated 20 October 2026

Get directions