IAE ACADEMY INSTITUTE FOR ENGINEERS

GATE EC · 2020

IAE Academy free study material · Updated 27 October 2026

GATE EC 2020 Solved Paper

INSIDE

- All 65 questions, in the order of the paper
- The official answer to every question
- Step-by-step worked solutions
- The answer key on one page

Question paper and official answer key: IIT Delhi

Online, with the questions linked to their topic notes: **iaeacademy.in/study/papers/ec-2020**

FREE COUNSELLING

Preparing for GATE EC? Talk to IAE Academy.

Or call **+91 84204 36524**

Every day, 10:30 am to 7:30 pm

Chat on WhatsApp

Free. Not for sale. Pass it on.

About this paper

65 questions, 100 marks. Question types: 42 MCQ · 23 NAT.

Official answer key: IIT Delhi

This paper numbers General Aptitude GA Q.1 to GA Q.10 and the subject questions Q.1 to Q.55: 65 questions in all.

We placed each question under a subject and topic ourselves; the exam paper does not label them.

This paper online, with the questions linked to their topic notes:
iaeacademy.in/study/papers/ec-2020

Answer key

Q	TYPE	MARKS	ANSWER
GA Q.1	MCQ	1	**A**
GA Q.2	MCQ	1	**B**
GA Q.3	MCQ	1	**B**
GA Q.4	MCQ	1	**C**
GA Q.5	MCQ	1	**A**
GA Q.6	MCQ	2	**A**
GA Q.7	MCQ	2	**B**
GA Q.8	MCQ	2	**C**
GA Q.9	MCQ	2	**C**
GA Q.10	MCQ	2	**B**
Q.1	MCQ	1	**C**
Q.2	MCQ	1	**C**
Q.3	MCQ	1	**B**
Q.4	MCQ	1	**C**
Q.5	MCQ	1	**C**
Q.6	MCQ	1	**B**
Q.7	MCQ	1	**B**
Q.8	MCQ	1	**D**
Q.9	MCQ	1	**C**
Q.10	MCQ	1	**A**
Q.11	MCQ	1	**B**
Q.12	MCQ	1	**D**
Q.13	MCQ	1	**A**
Q.14	MCQ	1	**A**
Q.15	NAT	1	**48**
Q.16	NAT	1	**2.80 to 2.85**
Q.17	NAT	1	**644 to 657**
Q.18	NAT	1	**6**
Q.19	NAT	1	**14**
Q.20	NAT	1	**3.050 to 3.080**
Q.21	NAT	1	**6.25**
Q.22	NAT	1	**0.5**
Q.23	NAT	1	**160**
Q.24	NAT	1	**6**
Q.25	NAT	1	**0.25**
Q.26	MCQ	2	**A**
Q.27	MCQ	2	**A**
Q.28	MCQ	2	**C**
Q.29	MCQ	2	**C**
Q.30	MCQ	2	**A**
Q.31	MCQ	2	**Marks to all**
Q.32	MCQ	2	**A**
Q.33	MCQ	2	**Marks to all**
Q.34	MCQ	2	**A**
Q.35	MCQ	2	**A**
Q.36	MCQ	2	**C**
Q.37	MCQ	2	**B**
Q.38	MCQ	2	**A**
Q.39	MCQ	2	**A**
Q.40	MCQ	2	**A**
Q.41	MCQ	2	**D**
Q.42	MCQ	2	**B**
Q.43	MCQ	2	**A**
Q.44	NAT	2	**800**
Q.45	NAT	2	**1**
Q.46	NAT	2	**0.8**
Q.47	NAT	2	**2**
Q.48	NAT	2	**3**
Q.49	NAT	2	**3.95 to 4.05**
Q.50	NAT	2	**76 to 77**
Q.51	NAT	2	**2.25**
Q.52	NAT	2	**58.50 to 58.80**
Q.53	NAT	2	**-2**
Q.54	NAT	2	**0.299 to 0.301**
Q.55	NAT	2	**30**

General Aptitude GA Q.1 to Q.10

GA Q.1 MCQ · 1 MARK

General Aptitude › Grammar & vocabulary

The untimely loss of life is a cause of serious global concern as thousands of people get killed_____accidents every year while many other die_____diseases like cardio vascular disease, cancer, etc.

(A) in, of

(B) from, of

(C) during, from

(D) from, from

Official answer: **A**

SOLUTION

1. **First blank, the preposition after "killed":** a person is killed *in* an event such as an accident, a war or a fire. "Killed in accidents" is the standard collocation. "Killed from accidents" is not idiomatic. "Killed during accidents" would place the death at a time while an accident was going on; it does not say that the accident caused the death, which is what the sentence means.
2. That rules out (B) and (D), which begin with "from", and (C), which begins with "during". Only (A) is left.
3. **Second blank, the preposition after "die":** we say *die of* a disease or other internal cause ("die of cancer", "die of heart disease"). "Die from" is more usual for a wound or an outside cause ("die from injuries").
4. Cardiovascular disease and cancer are diseases, so "die of diseases" fits best. This agrees with the "of" in (A).
5. Check the whole sentence: "...thousands of people get killed **in** accidents every year while many other die **of** diseases like cardio vascular disease, cancer, etc." Both blanks read correctly.
6. **Answer: (A) in, of**

KEY IDEA

Prepositions are fixed by collocation. "Killed" takes "in" before an event (killed in an accident, a war or a fire). "Die" takes "of" before a disease or internal cause (die of cancer), and "from" before a wound or external cause (die from injuries). The first blank alone is enough to answer, because only one option begins with "in".

WATCH OUT FOR

Picking (D) "from, from" because "die from a disease" sounds acceptable in everyday speech. The first blank rules it out: "killed from accidents" is not idiomatic English. Another mistake is picking (C) because "during" sounds formal. "Killed during accidents" gives only the time of the deaths, not their cause.

GA Q.2 MCQ · 1 MARK

General Aptitude › Grammar & vocabulary

He was not only accused of theft_____of conspiracy.

(A) rather

(B) but also

(C) but even

(D) rather than

Official answer: **B**

SOLUTION

1. The sentence already contains "not only", which opens a correlative conjunction. "Not only" is completed by its fixed partner, "but also".
2. The correlative pair "not only X but also Y" adds Y to X. Here X = "of theft" and Y = "of conspiracy", so the second accusation is added to the first.
3. Options (A) "rather" and (D) "rather than" express preference or replacement: "X rather than Y" means X and not Y. That contradicts "not only", which says both accusations apply.
4. Option (C) "but even" is not the standard partner of "not only". "Even" marks the second item as more surprising or extreme than the first, and nothing in the sentence supports that.
5. Filling in (B) gives "He was not only accused of theft but also of conspiracy." The pair is complete and both charges are kept. Answer: (B).

KEY IDEA

Correlative conjunctions come in fixed pairs. Once "not only" appears, the blank must hold its partner "but also", which adds the second item to the first.

WATCH OUT FOR

Choosing "rather than" because it also links two items. It replaces the first item with the second, and that clashes with "not only", which keeps both. Some candidates also pick "but even" because it sounds emphatic, but it is not the standard pair and it implies a surprise the sentence does not suggest.

GA Q.3 MCQ · 1 MARK

General Aptitude › Reasoning

Select the word that fits the analogy:

Explicit: Implicit :: Express: _____

(A) Impress

(B) Repress

(C) Compress

(D) Suppress

Official answer: **B**

SOLUTION

1. Find the relation in the first pair. *Explicit* means stated openly. *Implicit* means present but not stated, only implied. The two words are **antonyms**: one is openly expressed, the other is held back.
2. So the blank needs the **antonym of *express***. To express a feeling or thought is to let it out and show it.
3. (A) *Impress*: to make someone admire you, or to fix something in someone's mind. It is not the opposite of letting a feeling out. It only copies the ex- to im- prefix change from the first pair, and that is a spelling pattern, not a relation of meaning.
4. (C) *Compress*: to press into a smaller space. This is about physical size, not about showing or hiding a feeling.
5. (D) *Suppress*: its main sense is to put down by force or authority (suppress a revolt, suppress evidence). It can also mean holding back a reaction, but it is not the standard opposite of *express*.
6. (B) *Repress*: to keep a feeling or impulse from being expressed. We say *expressed* emotions and *repressed* emotions. A repressed feeling is still there but is not shown, just as an implicit meaning is there but is not stated. *Repress* is the direct antonym of *express*.
7. So Explicit : Implicit :: Express : **Repress**, option (B).

KEY IDEA

Work out how the first pair is related (here, they are opposites) and then find the word that has the same relation to the third word. Go by meaning, not by prefixes: explicit/implicit are opposites, so the blank takes the opposite of express, which is repress.

WATCH OUT FOR

Picking (A) Impress because it copies the ex- to im- prefix change of explicit/implicit. That is a spelling pattern, not a relation of meaning. The other trap is (D) Suppress. It can mean holding something back, but its main sense is putting something down by force. The usual opposite of expressed feelings is repressed feelings.

GA Q.4 MCQ · 1 MARK

General Aptitude › Reading

The Canadian constitution requires that equal importance be given to English and French. Last year, Air Canada lost a lawsuit, and had to pay a six-figure fine to a French-speaking couple after they filed complaints about formal in-flight announcements in English lasting 15 seconds, as opposed to informal 5 second messages in French.

The French-speaking couple were upset at _____.

(A) the in-flight announcements being made in English.

(B) the English announcements being clearer than the French ones.

(C) the English announcements being longer than the French ones.

(D) equal importance being given to English and French.

Official answer: **C**

SOLUTION

1. Find the complaint in the passage. The couple complained about "formal in-flight announcements in English lasting 15 seconds, as opposed to informal 5 second messages in French". The phrase "as opposed to" contrasts the English announcements with the French ones.
2. The passage names two differences: length (15 seconds against 5 seconds) and tone (formal against informal). The constitution requires equal importance for both languages, so the French messages received less than their fair share. Of these two differences, only length appears among the options.
3. (A) is wrong. The constitution gives English equal standing, so an announcement made in English is not a grievance by itself. The objection was to how the English announcements compared with the French ones.
4. (B) is wrong. The passage says nothing about how clear either announcement was. "Formal" and "informal" describe tone, not clarity, so (B) is an inference the text does not support.
5. (D) is wrong. Equal importance is what the couple wanted. Their complaint was that it had not been given, so they cannot have been upset at it.
6. (C) matches the passage. Since 15 seconds is longer than 5 seconds, the English announcements were longer than the French ones, which is exactly the imbalance the couple complained about. The answer is (C).

KEY IDEA

Answer from what the passage actually states. The words "as opposed to" mark the complaint as a contrast between the two languages, and the only contrast offered in the options is length: 15 seconds of English against 5 seconds of French. Under a rule of equal importance, that gap is the grievance.

WATCH OUT FOR

The usual mistake is picking (A) because the complaint was "about" the English announcements. The couple did not object to English being used, since the constitution protects both languages. They objected to English getting more time than French. Some candidates also pick (B) because they read "formal" as "clearer", but the passage never mentions clarity.

GA Q.5 MCQ · 1 MARK

General Aptitude › Numerical

A superadditive function $f(\cdot)$ satisfies the following property

$$f(x_1 + x_2) \geq f(x_1) + f(x_2)$$

Which of the following functions is a superadditive function for $x > 1$?

(A) e^x

(B) $\sqrt{x}$

(C) $1/x$

(D) e^{-x}

Official answer: **A**

SOLUTION

1. Take any $x_1, x_2 > 1$. An option qualifies only if $f(x_1 + x_2) \geq f(x_1) + f(x_2)$ holds for every such pair.
2. (A) e^x: by the law of exponents, $e^{x_1+x_2} = e^{x_1}e^{x_2}$. Put $a = e^{x_1}$ and $b = e^{x_2}$. Then $ab \geq a + b \iff ab - a - b + 1 \geq 1 \iff (a-1)(b-1) \geq 1$.
3. For $x > 1$ we have $a, b > e \approx 2.718$, so $(a-1)(b-1) > (e-1)^2 \approx 2.95 > 1$. So $e^{x_1+x_2} > e^{x_1} + e^{x_2}$ always holds, and e^x is superadditive.
4. (B) $\sqrt{x}$: both sides are positive, so compare their squares. $(\sqrt{x_1} + \sqrt{x_2})^2 = x_1 + x_2 + 2\sqrt{x_1 x_2} > x_1 + x_2$, so $\sqrt{x_1 + x_2} < \sqrt{x_1} + \sqrt{x_2}$. The inequality goes the wrong way (the function is subadditive), so (B) fails.
5. (C) $1/x$: $\dfrac{1}{x_1 + x_2} < \dfrac{1}{x_1} < \dfrac{1}{x_1} + \dfrac{1}{x_2}$, because a larger denominator gives a smaller positive fraction and $\dfrac{1}{x_2} > 0$. So (C) fails.
6. (D) e^{-x}: $e^{-(x_1+x_2)} = e^{-x_1}e^{-x_2} < e^{-x_1}$ because $0 < e^{-x_2} < 1$. That is already less than $e^{-x_1} + e^{-x_2}$, so (D) fails.
7. Quick check with $x_1 = x_2 = 2$: $e^4 \approx 54.6 > 2e^2 \approx 14.8$, while $\sqrt{4} = 2 < 2\sqrt{2} \approx 2.83$, $\frac{1}{4} < \frac{1}{2} + \frac{1}{2} = 1$ and $e^{-4} \approx 0.018 < 2e^{-2} \approx 0.27$. Only e^x works, so the answer is (A).

KEY IDEA

Superadditive means the value at a sum is at least the sum of the values. For e^x the value at a sum is a product, $e^{x_1}e^{x_2}$, and a product of two numbers larger than 2 beats their sum. Written exactly: $ab \geq a + b \iff (a-1)(b-1) \geq 1$. The other three functions are concave or decreasing on $x > 1$, so for them the value at the sum comes out smaller than the sum of the values.

WATCH OUT FOR

Reading the inequality backwards and choosing $\sqrt{x}$ because it "grows". For $\sqrt{x}$, $\sqrt{x_1 + x_2} < \sqrt{x_1} + \sqrt{x_2}$ always holds, so it is subadditive. A second trap is to forget the condition $x > 1$. On $(0, 1)$, $e^{x_1}e^{x_2} \geq e^{x_1} + e^{x_2}$ can fail: at $x_1 = x_2 = 0.1$ the left side is $e^{0.2} \approx 1.22$ and the right side is $2e^{0.1} \approx 2.21$. The claim for (A) rests on $e^x > e > 2$.

GA Q.6 MCQ · 2 MARKS

General Aptitude › Reading

The global financial crisis in 2008 is considered to be the most serious world-wide financial crisis, which started with the sub-prime lending crisis in USA in 2007. The sub-prime lending crisis led to the banking crisis in 2008 with the collapse of Lehman Brothers in 2008. The sub-prime lending refers to the provision of loans to those borrowers who may have difficulties in repaying loans, and it arises because of excess liquidity following the East Asian crisis.

Which one of the following sequences shows the correct precedence as per the given passage?

(A) East Asian crisis→ subprime lending crisis →banking crisis→ global financial crisis.

(B) Subprime lending crisis→ global financial crisis→ banking crisis→ East Asian crisis.

(C) Banking crisis→ subprime lending crisis→ global financial crisis → East Asian crisis.

(D) Global financial crisis → East Asian crisis → banking crisis → subprime lending crisis.

Official answer: **A**

SOLUTION

1. Read the question as a request for cause-before-effect order: each arrow means "comes before, or leads to". Write down every ordering the passage actually states.
2. Link 1 (last sentence): sub-prime lending "arises because of excess liquidity following the East Asian crisis". So East Asian crisis → sub-prime lending crisis. Nothing in the passage is placed before the East Asian crisis, so it is the earliest event named.
3. Link 2 (second sentence): "The sub-prime lending crisis led to the banking crisis in 2008". So sub-prime lending crisis (2007) → banking crisis (2008).
4. Link 3 (first sentence): the global financial crisis in 2008 "started with the sub-prime lending crisis in USA in 2007". So sub-prime lending crisis → global financial crisis.
5. The passage describes the global financial crisis as the overall outcome ("the most serious world-wide financial crisis") that began with the sub-prime crisis. The banking crisis, with the collapse of Lehman Brothers, is the 2008 event the sub-prime crisis led to along the way. Putting the links together: East Asian crisis → sub-prime lending crisis → banking crisis → global financial crisis.
6. Check each option against the three stated links. The elimination below does not depend on the reading in step 5. (B) Subprime → global → banking → East Asian puts the East Asian crisis after the sub-prime crisis, which breaks Link 1. (C) Banking → subprime → global → East Asian puts the banking crisis before the sub-prime crisis, which breaks Link 2, and puts the East Asian crisis last, which breaks Link 1. (D) Global → East Asian → banking → subprime puts the banking crisis before the sub-prime crisis, which breaks Link 2, and puts the global crisis before the sub-prime crisis it started with, which breaks Link 3.
7. (A) East Asian → subprime → banking → global satisfies Links 1, 2 and 3 and matches the chain in step 5. It is the only option that does. Answer: (A).

KEY IDEA

Turn every causal phrase in the passage into an arrow: "because of ... following" gives East Asian → sub-prime, "led to" gives sub-prime → banking, and "started with" gives sub-prime → global. Then rule out every option that reverses any one of those arrows. Only (A) keeps all three.

WATCH OUT FOR

Ordering the events by where they appear in the passage (the global crisis is mentioned first and the East Asian crisis last) instead of by cause and effect. The East Asian crisis is mentioned last, but it is the earliest cause. Another slip is reading "started with" backwards and putting the global crisis before the sub-prime crisis, as (D) does.

GA Q.7 MCQ · 2 MARKS

General Aptitude › Numerical

It is quarter past three in your watch. The angle between the hour hand and the minute hand is _____.

(A) 0°

(B) 7.5°

(C) 15°

(D) 22.5°

Official answer: **B**

SOLUTION

1. Quarter past three means the time is 3:15, so $H = 3$ hours and $M = 15$ minutes.
2. Minute hand: it turns 360° in 60 minutes, which is 6° per minute. At 15 minutes past the hour it is $15 \times 6^\circ = 90^\circ$ clockwise from 12, pointing exactly at the 3.
3. Hour hand: it turns 30° per hour, which is 0.5° per minute. At 3:15 it is $3 \times 30^\circ + 15 \times 0.5^\circ = 90^\circ + 7.5^\circ = 97.5^\circ$ clockwise from 12, a quarter of the way from the 3 towards the 4.
4. The angle between the hands is the difference: $97.5^\circ - 90^\circ = 7.5^\circ$.
5. Check with the clock-angle formula:

$$\theta = \left|30H - \frac{11}{2}M\right| = \left|30(3) - \frac{11}{2}(15)\right| = |90 - 82.5| = 7.5^\circ$$

So the answer is (B).

KEY IDEA

The hour hand keeps moving between the hour marks at 0.5° per minute, while the minute hand moves at 6° per minute. So at 3:15 the minute hand is on the 3 but the hour hand has moved $15 \times 0.5^\circ = 7.5^\circ$ past it. In general, $\theta = \left|30H - \frac{11}{2}M\right|$, and if that comes out above 180° you take $360^\circ - \theta$.

WATCH OUT FOR

Picking 0° (A) because both hands seem to point at the 3. That treats the hour hand as fixed on the hour mark, but in 15 minutes it has moved a quarter of the 30° gap between 3 and 4, which is 7.5°.

GA Q.8 MCQ · 2 MARKS

General Aptitude › Geometry

Q.No. 8 A circle with centre O is shown in the figure. A rectangle PQRS of maximum possible area is inscribed in the circle. If the radius of the circle is a, then the area of the shaded portion is _____.

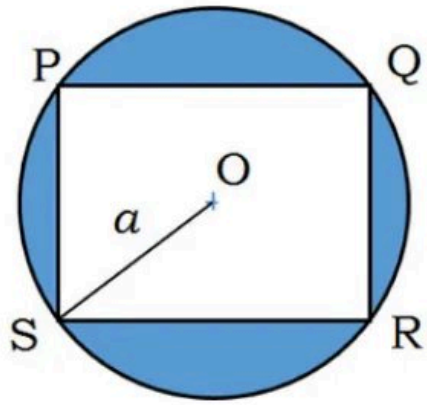

(A) $\pi a^2 - a^2$

(B) $\pi a^2 - \sqrt{2}a^2$

(C) $\pi a^2 - 2a^2$

(D) $\pi a^2 - 3a^2$

Official answer: **C**

SOLUTION

1. Shaded area = area of circle − area of rectangle $= \pi a^2 - \text{area}(PQRS)$.
2. A rectangle inscribed in a circle has its diagonal as a diameter: the right angle at P is an angle in a semicircle, so the chord SQ it subtends is a diameter. Hence $SQ = 2a$, and the segment $SO = a$ drawn in the figure is half of this diagonal.
3. Let the sides be x and y. Pythagoras in triangle SPQ gives $x^2 + y^2 = (2a)^2 = 4a^2$.
4. Since $(x - y)^2 \geq 0$, we have $2xy \leq x^2 + y^2$, so $xy \leq \dfrac{x^2 + y^2}{2} = \dfrac{4a^2}{2} = 2a^2$, with equality only when $x = y$.
5. So the rectangle of maximum area is a square of side $x = y = \sqrt{2}\,a$, and its area is $(\sqrt{2}\,a)^2 = 2a^2$.
6. Shaded area $= \pi a^2 - 2a^2$, which is option (C).

KEY IDEA

A rectangle inscribed in a circle always has a diameter ($2a$) as its diagonal. For a fixed diagonal, $x^2 + y^2 = 4a^2$ is fixed, and the product xy is largest when $x = y$. So the maximum-area inscribed rectangle is a square of area $2a^2$, and the shaded area is $\pi a^2 - 2a^2$.

WATCH OUT FOR

Taking the measurements from the figure. The rectangle is drawn wider than it is tall, but "maximum possible area" forces a square, so the drawing is not to scale. Another common slip is to treat a as the half-side or as the whole diagonal instead of the radius. That gives a square area of a^2 or $\sqrt{2}a^2$ and leads to options (A) or (B).

GA Q.9 MCQ · 2 MARKS

General Aptitude › Numerical

a, b, c are real numbers. The quadratic equation $ax^2 - bx + c = 0$ has equal roots, which is β, then

(A) $\beta = b/a$

(B) $\beta^2 = ac$

(C) $\beta^3 = bc/(2a^2)$

(D) $b^2 \neq 4ac$

Official answer: **C**

SOLUTION

1. The equation is quadratic, so $a \neq 0$. It has equal roots, which is β, so both of its roots are β.
2. Compare $ax^2 - bx + c = 0$ with the standard form $ax^2 + px + q = 0$. Here $p = -b$ and $q = c$.
3. Sum of the roots is $-\frac{p}{a}$:
$$\beta + \beta = \frac{b}{a} \quad \Rightarrow \quad \beta = \frac{b}{2a}$$
4. Product of the roots is $\frac{q}{a}$:
$$\beta \cdot \beta = \frac{c}{a} \quad \Rightarrow \quad \beta^2 = \frac{c}{a}$$
5. Multiply the two results:
$$\beta^3 = \beta \cdot \beta^2 = \frac{b}{2a} \cdot \frac{c}{a} = \frac{bc}{2a^2}$$
This holds for every such equation, so (C) is always true.
6. (A) says $\beta = b/a$, but $\beta = \frac{b}{2a}$. The two agree only when $b = 0$, so (A) is not true in general. (B) says $\beta^2 = ac$, but $\beta^2 = \frac{c}{a}$. These agree only when $c = 0$ or $a^2 = 1$, so (B) is not true in general. For example, $2x^2 - 4x + 2 = 0$, that is $2(x-1)^2 = 0$, has $\beta = 1$, while $b/a = 2$ and $ac = 4$. (C) checks out here: $\frac{bc}{2a^2} = \frac{4 \cdot 2}{2 \cdot 4} = 1 = \beta^3$.
7. Equal roots mean the discriminant is zero: $(-b)^2 - 4ac = 0$, so $b^2 = 4ac$. That makes (D), $b^2 \neq 4ac$, always false.
8. The only statement that must hold is (C).

KEY IDEA

For the double root β of $ax^2 - bx + c = 0$, the sum of the roots gives $2\beta = b/a$ and the product gives $\beta^2 = c/a$. Multiplying the two gives $\beta^3 = bc/(2a^2)$ directly.

WATCH OUT FOR

Forgetting that the two equal roots add up to 2β, not β, which leads to (A). Also: taking the sum as $-b/a$ without noticing that the equation is written with $-bx$ (this flips the sign of β), or writing the product of the roots as ac instead of c/a, which leads to (B).

GA Q.10 MCQ · 2 MARKS

General Aptitude › Data interpretation

Q.No. 10

The following figure shows the data of students enrolled in 5 years (2014 to 2018) for two schools P and Q. During this period, the ratio of the average number of the students enrolled in school P to the average of the difference of the number of students enrolled in schools P and Q is_____.

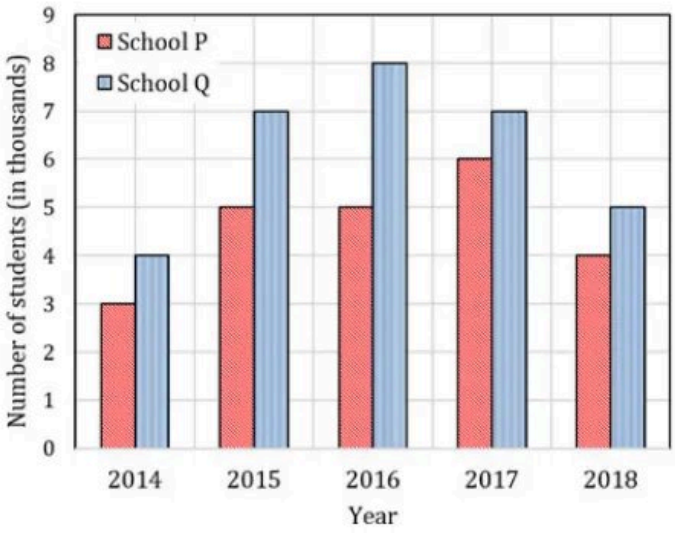

(A) $8 : 23$

(B) $23 : 8$

(C) $23 : 31$

(D) $31 : 23$

Official answer: **B**

SOLUTION

1. Read the chart (in thousands). School P: $3, 5, 5, 6, 4$. School Q: $4, 7, 8, 7, 5$.
2. Total for P: $3 + 5 + 5 + 6 + 4 = 23$, so the average for P is $\frac{23}{5}$ thousand.
3. Difference in each year, $Q - P$ (Q is higher every year, so the size of the difference has no sign ambiguity): $4 - 3 = 1,\ 7 - 5 = 2,\ 8 - 5 = 3,\ 7 - 6 = 1,\ 5 - 4 = 1$.
4. Sum of the differences: $1 + 2 + 3 + 1 + 1 = 8$, so the average difference is $\frac{8}{5}$ thousand. (Check: $\sum Q - \sum P = 31 - 23 = 8$.)
5. Both averages are taken over the same 5 years, so the $\frac{1}{5}$ cancels in the ratio:
$$\frac{\text{average of P}}{\text{average difference}} = \frac{23/5}{8/5} = \frac{23}{8}$$
6. So the ratio is $23 : 8$, which is option (B).

KEY IDEA

Both averages are taken over the same 5 years, so the ratio of the averages equals the ratio of the totals: $\sum P : \sum(Q - P) = 23 : (31 - 23) = 23 : 8$. Since Q is higher than P every year, the sum of the yearly differences is simply $\sum Q - \sum P$.

WATCH OUT FOR

Using the average of School Q ($31/5$) in place of the average difference, which gives $23 : 31$ (option C), or turning the ratio upside down to get $8 : 23$ (option A). The question asks for P's average divided by the average difference, in that order.

Electronics and Communication Engineering Q.1 to Q.55

Q.1 MCQ · 1 MARK

Engineering Mathematics › Linear algebra

If $\mathbf{v}_1, \mathbf{v}_2, \ldots, \mathbf{v}_6$ are six vectors in $\mathbb{R}^4$, which one of the following statements is FALSE?

(A) It is not necessary that these vectors span $\mathbb{R}^4$.

(B) These vectors are not linearly independent.

(C) Any four of these vectors form a basis for $\mathbb{R}^4$.

(D) If $\{\mathbf{v}_1, \mathbf{v}_3, \mathbf{v}_5, \mathbf{v}_6\}$ spans $\mathbb{R}^4$, then it forms a basis for $\mathbb{R}^4$.

Official answer: **C**

SOLUTION

1. Key fact: $\dim \mathbb{R}^4 = 4$. So a linearly independent set in $\mathbb{R}^4$ has at most 4 vectors, and a spanning set has at least 4 vectors.
2. (A) Six vectors need not span $\mathbb{R}^4$. For example, if all six are multiples of $\mathbf{e}_1$, their span is only a line. So (A) is TRUE.
3. (B) Six vectors in a 4-dimensional space are always linearly dependent, because $6 > 4$. Equivalently, the 4×6 matrix $A = [\mathbf{v}_1 \cdots \mathbf{v}_6]$ has rank at most $4 < 6$, so $A\mathbf{x} = \mathbf{0}$ has a nontrivial solution. So (B) is TRUE.
4. (C) (C) says that every choice of four vectors is a basis, so one counterexample disproves it. Take $\mathbf{v}_1 = \mathbf{e}_1$ and $\mathbf{v}_2 = 2\mathbf{e}_1$, with $\mathbf{v}_3, \ldots, \mathbf{v}_6$ anything. The set $\{\mathbf{v}_1, \mathbf{v}_2, \mathbf{v}_3, \mathbf{v}_4\}$ satisfies $2\mathbf{v}_1 - \mathbf{v}_2 = \mathbf{0}$, so it is linearly dependent and cannot be a basis. So (C) is FALSE.
5. (D) In an n-dimensional space, a set of exactly n vectors that spans the space is automatically linearly independent, and so it is a basis. Here $\{\mathbf{v}_1, \mathbf{v}_3, \mathbf{v}_5, \mathbf{v}_6\}$ has 4 vectors and spans $\mathbb{R}^4$, so it is a basis. So (D) is TRUE.
6. The only FALSE statement is (C).

KEY IDEA

In an n-dimensional space: more than n vectors are always dependent, a spanning set needs at least n vectors, and a set of exactly n vectors is a basis as soon as it spans or is independent (either one implies the other). Having more than n vectors says nothing about whether a particular subset of n of them is independent.

WATCH OUT FOR

Confusing "some four of the vectors form a basis" (possible, if the six span $\mathbb{R}^4$) with "any four form a basis" (false in general), and so picking (C) as true. A second trap is reading (A) as "the vectors do not span $\mathbb{R}^4$". It only says spanning is not guaranteed, which is true.

Q.2 MCQ · 1 MARK

Engineering Mathematics › Vector calculus

For a vector field $\vec{A}$, which one of the following is FALSE?

(A) $\vec{A}$ is solenoidal if $\nabla \cdot \vec{A} = 0$.

(B) $\nabla \times \vec{A}$ is another vector field.

(C) $\vec{A}$ is irrotational if $\nabla^2 \vec{A} = 0$.

(D) $\nabla \times \left(\nabla \times \vec{A}\right) = \nabla\left(\nabla \cdot \vec{A}\right) - \nabla^2 \vec{A}$

Official answer: **C**

SOLUTION

1. Check each statement against its definition. We want the one that is FALSE.
2. (A) By definition, a field is **solenoidal** (divergence-free) when $\nabla \cdot \vec{A} = 0$. TRUE.

3. (B) The curl has three components,
$$\nabla \times \vec{A} = \left(\frac{\partial A_z}{\partial y} - \frac{\partial A_y}{\partial z}\right)\hat{i} + \left(\frac{\partial A_x}{\partial z} - \frac{\partial A_z}{\partial x}\right)\hat{j} + \left(\frac{\partial A_y}{\partial x} - \frac{\partial A_x}{\partial y}\right)\hat{k},$$
so it is itself a vector field. TRUE.
4. (C) By definition, a field is **irrotational** when its curl vanishes: $\nabla \times \vec{A} = \vec{0}$. The condition $\nabla^2 \vec{A} = 0$ is Laplace's equation, which makes each component harmonic. It is not the irrotationality condition. FALSE.
5. Counter-example for (C): take $\vec{A} = y\,\hat{i}$. Every second derivative of y is zero, so $\nabla^2 \vec{A} = \vec{0}$. But the $\hat{k}$ component of the curl is $\frac{\partial A_y}{\partial x} - \frac{\partial A_x}{\partial y} = 0 - 1 = -1$, so $\nabla \times \vec{A} = -\hat{k} \neq \vec{0}$ and the field is not irrotational.
6. It fails the other way too. $\vec{A} = 3x^2\,\hat{i}$ has $\nabla \times \vec{A} = \vec{0}$, since A_x depends only on x and $A_y = A_z = 0$. So it is irrotational, but $\nabla^2 \vec{A} = 6\,\hat{i} \neq \vec{0}$. The Laplacian condition is neither sufficient nor necessary for irrotationality.
7. (D) This is the standard curl-of-curl identity, $\nabla \times (\nabla \times \vec{A}) = \nabla(\nabla \cdot \vec{A}) - \nabla^2 \vec{A}$, where $\nabla^2 \vec{A}$ is the vector Laplacian. TRUE.
8. The only false statement is (C).

KEY IDEA

Each field condition belongs to one operator. Solenoidal means $\nabla \cdot \vec{A} = 0$ (divergence). Irrotational means $\nabla \times \vec{A} = \vec{0}$ (curl). Harmonic means $\nabla^2 \vec{A} = 0$ (Laplacian). The curl-of-curl identity $\nabla \times (\nabla \times \vec{A}) = \nabla(\nabla \cdot \vec{A}) - \nabla^2 \vec{A}$ is standard. Neither of the last two conditions implies the other: $y\,\hat{i}$ is harmonic but not irrotational, and $3x^2\,\hat{i}$ is irrotational but not harmonic.

WATCH OUT FOR

Taking $\nabla^2 \vec{A} = 0$ for the irrotational condition because it looks like it involves the curl through the identity in (D). It doesn't: $\nabla^2 \vec{A} = 0$ is Laplace's equation, and $\nabla \times \vec{A} = \vec{0}$ is what makes a field irrotational. Another trap is picking (D) because of its sign. The minus sign in front of $\nabla^2 \vec{A}$ is correct.

Q.3 MCQ · 1 MARK

Engineering Mathematics › Calculus

The partial derivative of the function
$$f(x, y, z) = e^{1 - x\cos y} + xze^{-1/(1+y^2)}$$
with respect to x at the point $(1, 0, e)$ is

(A) -1

(B) 0

(C) 1

(D) $\frac{1}{e}$

Official answer: **B**

SOLUTION

1. Differentiate partially with respect to x, treating y and z as constants.
2. First term, by the chain rule: $\frac{\partial}{\partial x} e^{1 - x\cos y} = e^{1 - x\cos y} \cdot (-\cos y) = -\cos y\, e^{1 - x\cos y}$.
3. Second term: the factor $z\,e^{-1/(1+y^2)}$ does not depend on x, so $\frac{\partial}{\partial x}\left(xze^{-1/(1+y^2)}\right) = z\,e^{-1/(1+y^2)}$.
4. Adding the two terms:
$$\frac{\partial f}{\partial x} = -\cos y\, e^{1 - x\cos y} + z\,e^{-1/(1+y^2)}.$$
5. Substitute $(x, y, z) = (1, 0, e)$. Since $\cos 0 = 1$, $e^{1-1\cdot 1} = e^0 = 1$. Also $e^{-1/(1+0^2)} = e^{-1}$.
6. $$\left.\frac{\partial f}{\partial x}\right|_{(1,0,e)} = -1 \cdot 1 + e \cdot e^{-1} = -1 + 1 = 0.$$

7. The value is 0, which is option (B).

KEY IDEA
In a partial derivative with respect to x, treat y and z as constants. The chain rule gives the exponential term the factor $-\cos y$, and the second term is linear in x, so its derivative is just its coefficient $z\,e^{-1/(1+y^2)}$. Differentiate in general first, then substitute the point.

WATCH OUT FOR
Leaving out the chain-rule factor $-\cos y$ on the first term. That gives $e^0 + e \cdot e^{-1} = 2$, which is not an option, or, with the sign slipped, a wrong answer such as 1. The other common slip is substituting $x = 1$ before differentiating, which removes the x-dependence you are meant to differentiate.

Q.4 MCQ · 1 MARK

Engineering Mathematics › Differential equations

The general solution of $\dfrac{d^2y}{dx^2} - 6\dfrac{dy}{dx} + 9y = 0$ is

(A) $y = C_1e^{3x} + C_2e^{-3x}$

(B) $y = (C_1 + C_2x)e^{-3x}$

(C) $y = (C_1 + C_2x)e^{3x}$

(D) $y = C_1e^{3x}$

Official answer: **C**

SOLUTION

1. This is a linear homogeneous ODE with constant coefficients, so try $y = e^{mx}$. Substituting gives the auxiliary (characteristic) equation $m^2 - 6m + 9 = 0$.
2. Factorise: $m^2 - 6m + 9 = (m - 3)^2 = 0$, so $m = 3$ is a repeated real root (the discriminant is $36 - 36 = 0$).
3. For a repeated root m, the two independent solutions are e^{mx} and $x\,e^{mx}$, so
$$y = (C_1 + C_2x)e^{3x}.$$
4. Check the second solution. With $y = xe^{3x}$: $y' = (1 + 3x)e^{3x}$ and $y'' = (6 + 9x)e^{3x}$, so
$$y'' - 6y' + 9y = [(6 + 9x) - (6 + 18x) + 9x]\,e^{3x} = 0.$$
5. Rule out the other options. (A) uses the roots $m = \pm 3$, which belong to $m^2 - 9 = 0$. (B) has the repeated-root form but with $m = -3$, which belongs to $(m + 3)^2 = m^2 + 6m + 9 = 0$. (D) is a solution, but it has only one arbitrary constant, and the general solution of a second-order ODE needs two. Answer: (C).

KEY IDEA
The auxiliary equation $m^2 - 6m + 9 = (m - 3)^2 = 0$ has the repeated root $m = 3$. A repeated root m gives the pair e^{mx} and xe^{mx}, so the general solution is $(C_1 + C_2x)e^{3x}$.

WATCH OUT FOR
Two mistakes are common. One is getting the sign of the root wrong: the middle term $-6\,dy/dx$ gives the root $m = +3$, not -3, so (B) is wrong. The other is writing $C_1e^{3x} + C_2e^{3x}$ for a repeated root. That is really a single constant times e^{3x} (the same as option D), so it cannot be the general solution of a second-order equation. The second solution must carry the factor x.

Q.5 MCQ · 1 MARK

Signals and Systems › LTI & convolution

The output $y[n]$ of a discrete-time system for an input $x[n]$ is
$$y[n] = \max_{-\infty \le k \le n} |x[k]|.$$
The unit impulse response of the system is

(A) 0 for all n.

(B) 1 for all n.

(C) unit step signal $u[n]$.

(D) unit impulse signal $\delta[n]$.

Official answer: **C**

SOLUTION

1. By definition, the impulse response is the output when the input is $x[n] = \delta[n]$. Here $|x[k]| = |\delta[k]|$ equals 1 at $k = 0$ and 0 at every other k.
2. For $n < 0$: the window $-\infty \le k \le n$ never reaches $k = 0$, so every $|\delta[k]|$ in it is 0. Hence $y[n] = \max\{0, 0, \dots\} = 0$.
3. For $n \ge 0$: the window now contains $k = 0$, where $|\delta[0]| = 1$, and every other sample in it is 0. Hence $y[n] = \max\{\dots, 0, 1, 0, \dots\} = 1$.
4. Combining the two cases:
$$h[n] = \begin{cases} 0, & n < 0 \\ 1, & n \ge 0 \end{cases} = u[n].$$
5. Checking the other options: (A) is wrong because from $n = 0$ onwards the window contains the sample of value 1. (B) is wrong because for $n < 0$ that sample is not yet in the window. (D) is wrong because a running maximum can never decrease: once it has seen the 1 at $k = 0$, it stays at 1 for every $n \ge 0$ and does not fall back to 0 at $n = 1$.
6. Note: the system is non-linear (because of $|\cdot|$ and $\max$), so $h[n]$ does not fully describe it and cannot be used in a convolution. The question only asks for the output when the input is $\delta[n]$, and that output is $u[n]$.

KEY IDEA

$y[n]$ is a running maximum of $|x[k]|$ over all past and present samples, so it can only stay the same or rise. With $x[n] = \delta[n]$, the single sample of value 1 at $k = 0$ enters the window at $n = 0$ and stays in it for every later n. The output jumps from 0 to 1 at $n = 0$ and holds there, which is $u[n]$.

WATCH OUT FOR

Choosing (D), $\delta[n]$, by treating the system as if it passed the current input straight through. The maximum is taken over the whole past window $-\infty \le k \le n$, not only $k = n$, so the 1 at $k = 0$ is remembered for all $n \ge 0$. A second mistake is to use this $h[n]$ in a convolution: the system is non-linear, so $h[n]$ does not determine its response to other inputs.

Q.6 MCQ · 1 MARK

Electronic Devices › Semiconductors

A single crystal intrinsic semiconductor is at a temperature of 300 K with effective density of states for holes twice that of electrons. The thermal voltage is 26 mV. The intrinsic Fermi level is shifted from mid-bandgap energy level by

(A) 18.02 meV.

(B) 9.01 meV.

(C) 13.45 meV.

(D) 26.90 meV.

Official answer: **B**

SOLUTION

1. Mid-bandgap energy: $E_{mid} = \dfrac{E_c + E_v}{2}$.

2. The intrinsic Fermi level satisfies $N_c \exp\left(-\frac{E_c - E_i}{kT}\right) = N_v \exp\left(-\frac{E_i - E_v}{kT}\right)$ (equal electron and hole concentrations in an intrinsic semiconductor). Solving for E_i gives $E_i = \frac{E_c + E_v}{2} + \frac{kT}{2}\ln\left(\frac{N_v}{N_c}\right)$, so the shift from mid-gap is $E_i - E_{mid} = \frac{kT}{2}\ln\left(\frac{N_v}{N_c}\right)$.
3. Given $N_v = 2N_c$, so $\frac{N_v}{N_c} = 2$.
4. Shift magnitude $= \frac{kT}{2}\ln(2) = \frac{26\ \text{meV}}{2} \times 0.693 = 13\ \text{meV} \times 0.693$.
5. $= 9.01\ \text{meV}$.
6. Since $N_v > N_c$, $\ln(N_v/N_c) > 0$, so E_i is shifted above mid-gap (toward the conduction band edge E_c) by this amount, magnitude $9.01\ \text{meV}$.

KEY IDEA

For an intrinsic semiconductor, equating $n_i = N_c e^{-(E_c - E_i)/kT}$ with $p_i = N_v e^{-(E_i - E_v)/kT}$ gives $E_i = \frac{E_c + E_v}{2} + \frac{kT}{2}\ln\left(\frac{N_v}{N_c}\right)$, so a larger N_v relative to N_c pushes E_i above mid-gap, toward E_c.

WATCH OUT FOR

Getting the magnitude right (using $kT\ln(2)/2$) but reversing the direction: assuming a larger N_v pulls E_i toward the valence band, when the correct derivation shows it pushes E_i above mid-gap, toward the conduction band. Since the options here ask only for magnitude, this sign error does not change which option is correct, but it must not be stated as fact.

Q.7 MCQ · 1 MARK

Electronic Devices › Carrier transport

Consider the recombination process via bulk traps in a forward biased pn homojunction diode. The maximum recombination rate is U_{max}. If the electron and the hole capture cross-sections are equal, which one of the following is FALSE?

(A) With all other parameters unchanged, U_{max} decreases if the intrinsic carrier density is reduced.

(B) U_{max} occurs at the edges of the depletion region in the device.

(C) U_{max} depends exponentially on the applied bias.

(D) With all other parameters unchanged, U_{max} increases if the thermal velocity of the carriers increases.

Official answer: **B**

SOLUTION

1. **Setup: SRH recombination through bulk traps.** For a single bulk trap level, the Shockley–Read–Hall recombination rate is
$$U = \frac{np - n_i^2}{\tau_p(n + n_1) + \tau_n(p + p_1)}$$
where the capture-limited lifetimes are $\tau_n = \frac{1}{\sigma_n v_{th} N_t}$ and $\tau_p = \frac{1}{\sigma_p v_{th} N_t}$.
2. **Equal capture cross-sections.** Given $\sigma_n = \sigma_p$, the two lifetimes become equal: $\tau_n = \tau_p = \tau$. The rate simplifies to
$$U = \frac{np - n_i^2}{\tau\,(n + p + n_1 + p_1)}.$$
3. **Where the maximum occurs.** Across the depletion region of a forward-biased junction, the product of carrier concentrations stays constant, $np = n_i^2\, e^{qV/kT}$, even though n and p individually vary from one edge to the other. For appreciable forward bias, $n_1, p_1 \ll n, p$, so U is maximized where $n + p$ is minimized subject to np fixed. By the AM–GM inequality, this minimum occurs at $n = p = \sqrt{np} =$

$n_i\, e^{qV/2kT}$, an interior point of the space-charge region, **not** at either edge (the n-side edge has $n \gg p$; the p-side edge has $p \gg n$).

4. **Value of U_{max}.** Substituting $n = p = n_i\, e^{qV/2kT}$:

$$U_{max} = \frac{n_i^2 e^{qV/kT} - n_i^2}{2\tau\, n_i\, e^{qV/2kT}} \approx \frac{n_i}{2\tau}\, e^{qV/2kT} \quad \text{for } qV \gg kT.$$

5. **Check (A):** $U_{max} \propto n_i$ directly, so reducing the intrinsic carrier density n_i (all else unchanged) decreases U_{max}: statement is TRUE.
6. **Check (C):** $U_{max} \propto e^{qV/2kT}$, an exponential dependence on the applied bias V: statement is TRUE.
7. **Check (D):** Since $\tau \propto 1/v_{th}$, we get $U_{max} \propto v_{th}$; increasing the thermal velocity of the carriers increases U_{max}: statement is TRUE.
8. **Check (B):** The location of maximum recombination is the interior point where $n \approx p$, not the edges of the depletion region: statement is FALSE.
9. **Conclusion.** The FALSE statement is (B).

KEY IDEA

In SRH recombination through bulk traps, with equal capture cross-sections ($\tau_n = \tau_p = \tau$), the recombination rate $U = \dfrac{np - n_i^2}{\tau(n + n_1) + \tau(p + p_1)}$ is maximized (for a fixed product np, which is constant across the depletion region under bias) at the point where $n \approx p$: by AM-GM, $n + p$ is minimized when $n = p = \sqrt{np}$. This point of equal carrier concentrations lies in the *interior* of the space-charge region, not at its edges (where one carrier type dominates), so statement (B) is the false one.

WATCH OUT FOR

Confusing "maximum recombination" with "maximum generation/depletion edge effects," or assuming the peak SRH rate tracks the majority-carrier profile (which would incorrectly place it at an edge). Students also sometimes forget that with $\sigma_n = \sigma_p$ the trap becomes an effective midgap-like center for symmetry purposes, which is what makes the $n \approx p$ condition the maximizing condition rather than some edge-biased condition.

Q.8 MCQ · 1 MARK

Analog Electronics › Filters & waveforms

Q.No. 8 The components in the circuit shown below are ideal. If the op-amp is in positive feedback and the input voltage V_i is a sine wave of amplitude 1 V, the output voltage V_o is

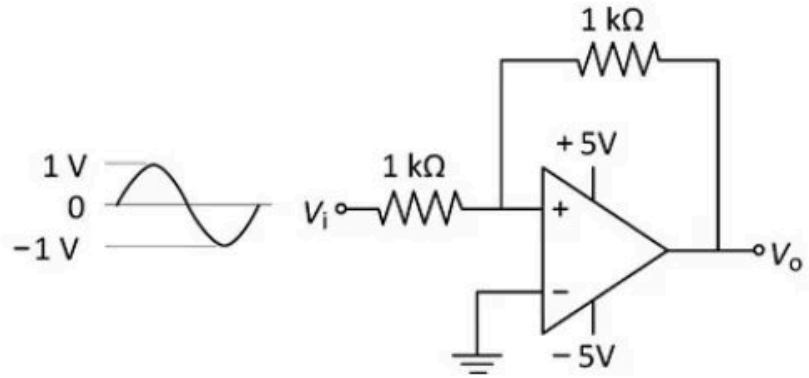

(A) a non-inverted sine wave of 2 V amplitude.

(B) an inverted sine wave of 1 V amplitude.

(C) a square wave of 5 V amplitude.

(D) a constant of either +5 V or −5 V.

Official answer: **D**

SOLUTION

1. Identify the circuit. The 1 kΩ feedback resistor returns the output to the $+$ input and the $-$ input is grounded, so this is a non-inverting Schmitt trigger (a comparator with hysteresis). With positive feedback there is no virtual short: $V_+ \neq V_-$ in general, and the ideal op-amp output sits at one supply rail, $V_o = +5$ V or $V_o = -5$ V (ideal op-amp, output saturates at the supply, no current into the input terminals).
2. Find the voltage at the $+$ input by superposition on the two equal 1 kΩ resistors (no current flows into the ideal op-amp input):
$$V_+ = V_i \frac{1\ \text{k}\Omega}{2\ \text{k}\Omega} + V_o \frac{1\ \text{k}\Omega}{2\ \text{k}\Omega} = \frac{V_i + V_o}{2}$$
3. Switching condition: the output changes state only when V_+ crosses $V_- = 0$, that is when $V_i + V_o = 0$, or $V_i = -V_o$.
4. Thresholds: while $V_o = +5$ V, $V_+ = \frac{V_i+5}{2}$ goes negative only if $V_i < -5$ V, so the lower threshold is $V_{TL} = -5$ V. While $V_o = -5$ V, $V_+ = \frac{V_i-5}{2}$ goes positive only if $V_i > +5$ V, so the upper threshold is $V_{TH} = +5$ V. The hysteresis width is $V_{TH} - V_{TL} = 10$ V.
5. Compare with the input: V_i swings only between -1 V and $+1$ V, well inside the band from -5 V to $+5$ V, so it never reaches either threshold. (Check: with $V_o = +5$ V, V_+ stays between 2 V and 3 V, always positive; with $V_o = -5$ V, V_+ stays between -3 V and -2 V, always negative.)
6. So the output never switches. It stays at whichever rail it started on: a constant $+5$ V or -5 V. Option (D).

KEY IDEA

With positive feedback the op-amp acts as a comparator with hysteresis: the output is always at a rail, and it switches only when the input crosses a threshold. For this non-inverting Schmitt trigger, $V_+ = \frac{V_i + V_o}{2}$ gives thresholds $V_i = \mp 5\ \text{V}$. A $\pm 1\ \text{V}$ input stays inside the hysteresis band, so the output is latched at $+5\ \text{V}$ or $-5\ \text{V}$.

WATCH OUT FOR

Treating the circuit as a linear amplifier. Assuming a virtual short ($V_+ = V_-$) gives a gain of -1 and leads to option (B), and misreading it as a non-inverting amplifier gives option (A); neither is valid under positive feedback. A second trap is picking (C) because "a comparator turns a sine into a square wave". That only happens if the input amplitude exceeds the thresholds (here $\pm 5\ \text{V}$), and a 1 V sine does not.

Q.9 MCQ · 1 MARK

Networks (Electric Circuits) › Theorems

Q.No. 9

In the circuit shown below, the Thevenin voltage V_{TH} is

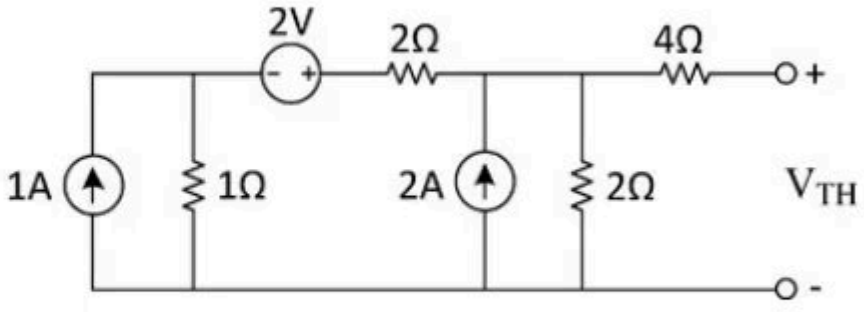

(A) 2.4 V

(B) 2.8 V

(C) 3.6 V

(D) 4.5 V

Official answer: **C**

SOLUTION

1. The output is open-circuited, so the $4\,\Omega$ resistor carries no current and drops no voltage: $V_{TH} = V_B$, the voltage of the node joining the $2\ \text{A}$ source and the right-hand $2\,\Omega$ resistor.
2. Source transformation on the left: $1\ \text{A}$ in parallel with $1\,\Omega$ becomes a $1 \times 1 = 1\ \text{V}$ source in series with $1\,\Omega$. The current source pushes current up into node A, so the $1\ \text{V}$ source has its positive terminal towards node A.
3. Going from the bottom rail up through the $1\ \text{V}$ source and then left to right through the $2\ \text{V}$ source ($-$ on the left, $+$ on the right), both are rises, so they add: $1 + 2 = 3\ \text{V}$. The resistances in series are $1 + 2 = 3\,\Omega$.
4. So node B is fed by a $3\ \text{V}$ source through $3\,\Omega$, plus the $2\ \text{A}$ source into the node, with $2\,\Omega$ from the node to the reference rail.
5. KCL at node B (current leaving = current entering):
$$\frac{V_B - 3}{3} + \frac{V_B}{2} = 2$$
6. Multiply out: $\frac{V_B}{3} + \frac{V_B}{2} = 2 + 1 = 3$, so $\frac{5}{6} V_B = 3 \Rightarrow V_B = 3.6\ \text{V}$.

7. Check by a second source transformation: $3\ \text{V}$ behind $3\,\Omega$ is $1\ \text{A}$ in parallel with $3\,\Omega$. The total current into the node is $1 + 2 = 3\ \text{A}$, flowing through $3\,\Omega \parallel 2\,\Omega = \dfrac{3 \times 2}{3 + 2} = 1.2\,\Omega$, giving $3 \times 1.2 = 3.6\ \text{V}$.
8. $V_{TH} = 3.6\ \text{V}$, which is option (C).

KEY IDEA

With the output open, no current flows in the $4\,\Omega$ resistor, so V_{TH} is simply the voltage of the node before it. Repeated source transformations reduce the left side to a $3\ \text{V}$ source behind $3\,\Omega$ (or a $1\ \text{A}$ source in parallel with $3\,\Omega$). One KCL equation, or current times parallel resistance, then gives the node voltage.

WATCH OUT FOR

Three mistakes are common. (1) Counting a voltage drop across the $4\,\Omega$ resistor, or adding $4\,\Omega$ into the node equation, even though it carries no current on open circuit. (2) Subtracting the $2\ \text{V}$ source from the transformed $1\ \text{V}$ source: both rise in the same direction ($-$ to $+$ going left to right), so they add to $3\ \text{V}$. (3) Adding the two current sources directly ($1 + 2 = 3\ \text{A}$) without first moving the $1\ \text{A}$ source past the $2\ \text{V}$ source and the $2\,\Omega$ resistor by source transformation.

Q.10 MCQ · 1 MARK

Digital Electronics › Combinational

Q.No. 10 The figure below shows a multiplexer where S_1 and S_0 are the select lines, I_0 to I_3 are the input data lines, EN is the enable line, and $F\,(P, Q, R)$ is the output. F is

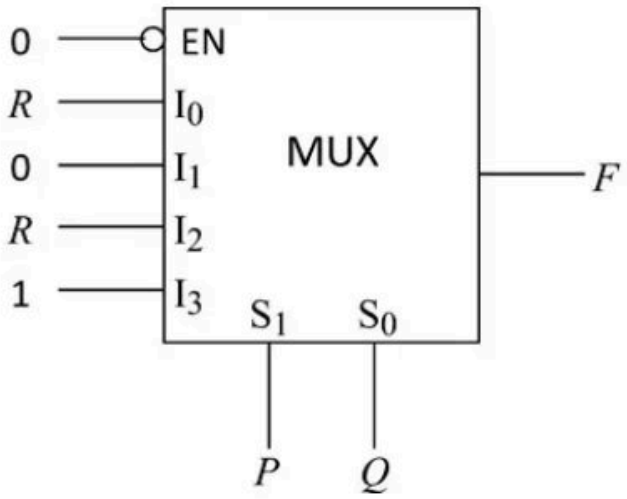

(A) $PQ + \bar{Q}R.$

(B) $P + Q\bar{R}.$

(C) $P\bar{Q}R + \bar{P}Q.$

(D) $\bar{Q} + PR.$

Official answer: **A**

SOLUTION

1. The EN input has an inversion bubble, so it is active-low. It is tied to 0, so the MUX is enabled and works as a normal 4-to-1 multiplexer.
2. Output of a 4-to-1 MUX (complement written with –):
$$F = \overline{S_1}\,\overline{S_0}\,I_0 + \overline{S_1}S_0I_1 + S_1\overline{S_0}I_2 + S_1S_0I_3$$
3. Substitute $S_1 = P$, $S_0 = Q$, $I_0 = R$, $I_1 = 0$, $I_2 = R$, $I_3 = 1$:

$$F = \overline{P}\,\overline{Q}R + 0 + P\overline{Q}R + PQ$$

4. Combine the two $\overline{Q}R$ terms using $\overline{P} + P = 1$: $\overline{P}\,\overline{Q}R + P\overline{Q}R = \overline{Q}R$.
5. So $F = PQ + \overline{Q}R$, which is option (A).
6. Checking the other options against the MUX directly: with $P = 1, Q = 0, R = 0$ the MUX selects $I_2 = R = 0$, but (B) $P + Q\overline{R} = 1$. With $P = 1, Q = 1$ the MUX selects $I_3 = 1$, but (C) $P\overline{Q}R + \overline{P}Q = 0$. With $P = 0, Q = 0, R = 0$ the MUX selects $I_0 = R = 0$, but (D) $\overline{Q} + PR = 1$. So (B), (C) and (D) are all wrong, and (A) is the answer.

KEY IDEA

A MUX output is the sum of each minterm of the select lines ANDed with the data input on that line. Take the enable first: an active-low EN tied to 0 means the MUX is enabled. Then write $F = \sum m_i(S_1, S_0)\, I_i$ with $S_1 = P$ (the MSB) and $S_0 = Q$, and simplify.

WATCH OUT FOR

Two mistakes are common. The first is reading EN = 0 as 'disabled' (output stuck at 0) and missing the bubble that makes EN active-low. The second is swapping the select lines, taking Q as the MSB. That sends $I_1 = 0$ and $I_2 = R$ to the wrong minterms and gives $F = PQ + \overline{P}R$, which is not among the options.

Q.11 MCQ · 1 MARK

Control Systems › Nyquist

Q.No. 11 The pole-zero map of a rational function $G(s)$ is shown below. When the closed contour Γ is mapped into the $G(s)$-plane, then the mapping encircles

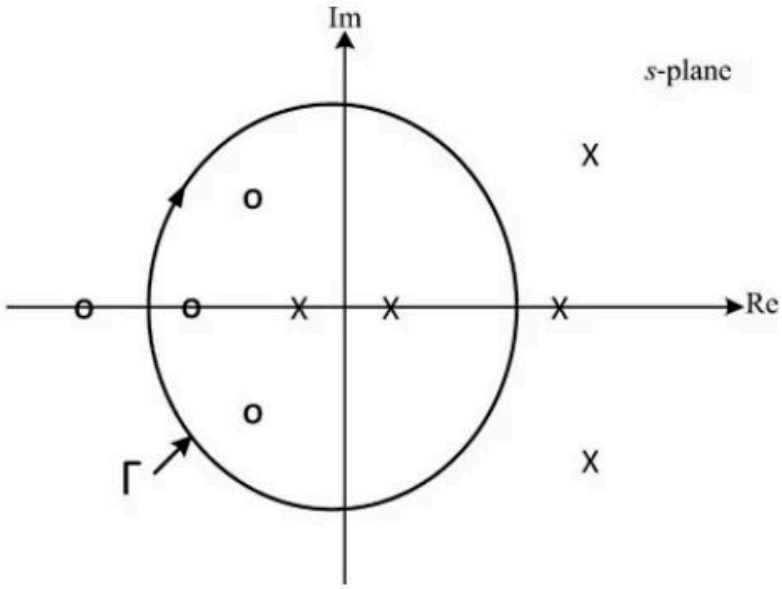

(A) the origin of the $G(s)$-plane once in the counter-clockwise direction.

(B) the origin of the $G(s)$-plane once in the clockwise direction.

(C) the point $-1 + j0$ of the $G(s)$-plane once in the counter-clockwise direction.

(D) the point $-1 + j0$ of the $G(s)$-plane once in the clockwise direction.

Official answer: **B**

SOLUTION

1. **Direction of Γ.** The only arrowhead on the curve is on the upper-left arc, pointing up and to the right along the curve. Going up the left side and then across the top is **clockwise**. The second arrow, at the lower left, starts at the label Γ and points across the curve rather than along it. It only marks which curve is Γ and says nothing about direction.

2. **Count what Γ encloses.** Zeros inside are the real-axis zero just inside the left edge and the complex-conjugate pair in the left half-plane, so $Z = 3$. Poles inside are the two real-axis poles on either side of the origin, so $P = 2$. The far-left zero, the real pole just beyond the right edge and the right-half-plane complex poles all lie outside Γ. No pole or zero lies on Γ, so $G(\Gamma)$ is a closed curve that never passes through the origin.
3. **Principle of the argument.** Write $G(s) = K\dfrac{\prod_i (s - z_i)}{\prod_k (s - p_k)}$. Then $\angle G(s) = \angle K + \sum_i \angle(s - z_i) - \sum_k \angle(s - p_k)$. As s goes once round Γ, the vector $s - a$ makes one full turn if a is inside Γ. If a is outside, the vector ends at the angle it started from, so its net change is zero. Only the enclosed poles and zeros change $\angle G(s)$.
4. Angles are measured counter-clockwise positive, and Γ is clockwise, so each enclosed factor turns by -2π. Zeros enter $\angle G$ with a plus sign and poles with a minus sign:
$$\Delta\angle G = Z(-2\pi) - P(-2\pi) = -2\pi(Z - P) = -2\pi(3 - 2) = -2\pi$$
5. **Net encirclement.** A net angle change of -2π means the image point $G(s)$ goes round the **origin** of the $G(s)$-plane once **clockwise**, i.e. $N = Z - P = 1$ clockwise encirclement. This is option **(B)**.
6. **Eliminate the rest.** Option (A) names the right point but the wrong direction. You get (A) if you take Γ as counter-clockwise or use $P - Z$ for clockwise encirclements. For (C) and (D): an encirclement of $-1 + j0$ by $G(\Gamma)$ is an encirclement of the origin by $1 + G(\Gamma)$. That count is the number of zeros of $1 + G(s)$ inside Γ minus the number of its poles there. The poles of $1 + G$ are the poles of G. Its zeros depend on the gain K, and a pole-zero map does not give K. So the figure settles neither (C) nor (D), and (B) is the only option it determines.

KEY IDEA

By the principle of the argument, when s goes once clockwise round a closed contour, the image $G(s)$ goes clockwise round the origin $N = Z - P$ times. Here Z and P count only the zeros and poles of G inside the contour. Γ is clockwise and encloses 3 zeros and 2 poles, so $N = 1$ clockwise. A pole-zero map tells you about encirclements of the origin only. Encirclements of $-1 + j0$ depend on the zeros of $1 + G(s)$, which change with the gain.

WATCH OUT FOR

One mistake is to count every pole and zero on the map instead of only those inside Γ. Another is to read the arrow beside the label Γ as a direction arrow. A third is to use $P - Z$ where the rule for clockwise encirclements needs $Z - P$. The last two turn the correct answer (B) into (A). Candidates who go straight to Nyquist habits also pick (C) or (D), because they expect every encirclement question to be about $-1 + j0$. That point can't be decided from a pole-zero map with no gain given.

Q.12 MCQ · 1 MARK

Q.No. 12 A digital communication system transmits a block of N bits. The probability of error in decoding a bit is α. The error event of each bit is independent of the error events of the other bits. The received block is declared erroneous if at least one of its bits is decoded wrongly. The probability that the received block is erroneous is

(A) $N(1-\alpha)$

(B) α^N

(C) $1-\alpha^N$

(D) $1-(1-\alpha)^N$

Official answer: **D**

Q.13 MCQ · 1 MARK

Electromagnetics › Transmission lines

The impedances $Z = jX$, for all X in the range $(-\infty, \infty)$, map to the Smith chart as

(A) a circle of radius 1 with centre at $(0, 0)$.

(B) a point at the centre of the chart.

(C) a line passing through the centre of the chart.

(D) a circle of radius 0.5 with centre at $(0.5, 0)$.

Official answer: **A**

SOLUTION

1. The Smith chart plots the reflection coefficient $\Gamma = \dfrac{z-1}{z+1}$ in the complex Γ-plane, where $z = Z/Z_0$ is the normalised impedance (with a real characteristic impedance Z_0). For $Z = jX$ the normalised value $z = jx$, with $x = X/Z_0$, is still purely imaginary, so the normalised resistance is $r = 0$.
2. Substitute $z = jx$:
$$\Gamma = \frac{jx-1}{jx+1}$$
3. Take the magnitude. The numerator and denominator have equal moduli:
$$|\Gamma| = \frac{\sqrt{x^2+1}}{\sqrt{x^2+1}} = 1 \quad \text{for every real } x$$
4. So every purely reactive load gives $|\Gamma| = 1$: total reflection, because a reactance absorbs no power. The locus is the set of points with $|\Gamma| = 1$, a circle of radius 1 centred at the origin, which is the outer boundary of the chart.
5. The whole circle is covered. $x = 0$ (short circuit) gives $\Gamma = -1$, $x = +1$ gives $\Gamma = \dfrac{j-1}{j+1} = j$, $x = -1$ gives $\Gamma = -j$, and $x \to \pm\infty$ (open circuit) gives $\Gamma \to +1$. The phase is $\angle\Gamma = \pi - 2\tan^{-1} x$. As x runs from $-\infty$ to ∞, $\tan^{-1} x$ runs from $-\pi/2$ to $\pi/2$, so $\angle\Gamma$ sweeps the full range from 2π down to 0.
6. Cross-check with the constant-r circles: the circle for resistance r has centre $\left(\dfrac{r}{1+r}, 0\right)$ and radius $\dfrac{1}{1+r}$. Putting $r = 0$ gives centre $(0, 0)$ and radius 1, which is option (A).

KEY IDEA

A pure reactance is lossless, so it reflects all the incident power: $|\Gamma| = \left|\dfrac{jx-1}{jx+1}\right| = 1$. On the Smith chart this is the $r = 0$ constant-resistance circle, which has centre $\left(\dfrac{r}{1+r}, 0\right) = (0, 0)$ and radius $\dfrac{1}{1+r} = 1$. That circle is the chart's outer rim.

WATCH OUT FOR

Option (D) is the circle for $r = 1$: centre $(0.5, 0)$, radius 0.5, the matching circle that passes through the chart's centre. Candidates who mix up the $r = 0$ and $r = 1$ circles pick it. Option (C) comes from confusing the locus with the real axis, which is the $x = 0$ line of purely resistive loads. Option (B) is the single matched point $z = 1$ ($\Gamma = 0$), not a locus of reactances.

Q.14 MCQ · 1 MARK

Signals and Systems › z-transform

Q.No. 14 Which one of the following pole-zero plots corresponds to the transfer function of an LTI system characterized by the input-output difference equation given below?

$$y[n] = \sum_{k=0}^{3} (-1)^k \, x[n-k]$$

(A)

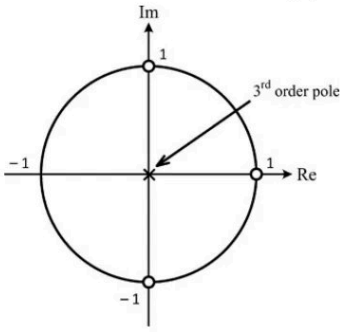

(B)

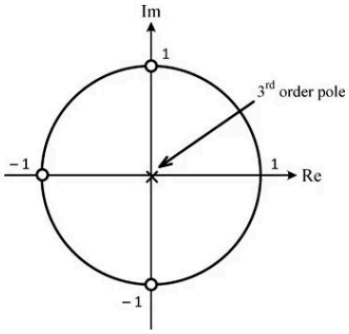

(C)

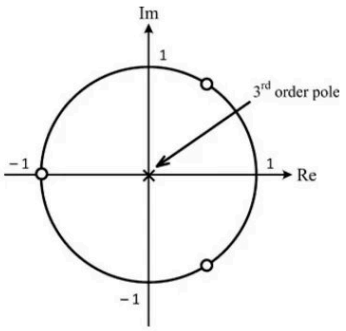

(D)

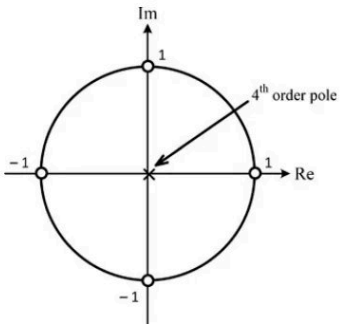

Official answer: **A**

SOLUTION

1. Expand the sum: $y[n] = x[n] - x[n-1] + x[n-2] - x[n-3]$. This is a 4-tap FIR filter with impulse response $h[n] = \{1, -1, 1, -1\}$.
2. Take the z-transform using the time-shift property $x[n-k] \leftrightarrow z^{-k}X(z)$:

$$H(z) = \frac{Y(z)}{X(z)} = 1 - z^{-1} + z^{-2} - z^{-3}$$

3. Factor by grouping:
$$H(z) = (1 - z^{-1}) + z^{-2}(1 - z^{-1}) = (1 - z^{-1})(1 + z^{-2})$$
4. Multiply numerator and denominator by z^3 so the poles and zeros can be read off in positive powers of z:
$$H(z) = \frac{z^3 - z^2 + z - 1}{z^3} = \frac{(z - 1)(z^2 + 1)}{z^3}$$
5. Zeros: $z - 1 = 0 \Rightarrow z = 1$, and $z^2 + 1 = 0 \Rightarrow z = \pm j$. All three lie on the unit circle.
6. Poles: the denominator z^3 gives a 3rd-order pole at $z = 0$. The numerator is not zero at $z = 0$ (it equals -1 there), so nothing cancels. In general, a causal FIR filter with taps $h[0], \ldots, h[N-1]$ and $h[N-1] \neq 0$ has $N - 1$ poles at the origin; here $N = 4$.
7. Cross-check with the geometric series:
$$H(z) = \sum_{k=0}^{3} \left(-z^{-1}\right)^k = \frac{1 - z^{-4}}{1 + z^{-1}}$$
The numerator vanishes at the fourth roots of unity $1, j, -1, -j$, but the factor at $z = -1$ is cancelled by the denominator $1 + z^{-1}$. That leaves zeros at 1 and $\pm j$, which rules out B (zero at -1 instead of 1), C (zeros at -1 and $e^{\pm j\pi/3}$) and D (four zeros, 4th-order pole).
8. Only option A shows zeros at 1, j, $-j$ with a 3rd-order pole at the origin.

KEY IDEA

For an FIR difference equation, $H(z)$ is just the tap polynomial $\sum h[k]z^{-k}$. Multiply through by z^{N-1} to get $N - 1$ poles at the origin and the finite zeros as roots of $z^{N-1}H(z)$. With alternating signs the taps factor neatly: $1 - z^{-1} + z^{-2} - z^{-3} = (1 - z^{-1})(1 + z^{-2})$.

WATCH OUT FOR

Each wrong option matches a specific slip. Dropping the $(-1)^k$ gives $1 + z^{-1} + z^{-2} + z^{-3} = \frac{(z+1)(z^2+1)}{z^3}$, which is option B. Using the geometric-series form $\frac{1 - z^{-4}}{1 + z^{-1}}$ but forgetting that the denominator cancels the zero at $z = -1$ gives four zeros and a 4th-order pole, which is option D. The sum has four terms ($k = 0$ to 3), so the highest delay is z^{-3} and there are exactly 3 poles at the origin, not 4.

Q.15 NAT · 1 MARK

Networks (Electric Circuits) › Two-port

Q.No. 15 In the given circuit, the two-port network has the impedance matrix $[Z] = \begin{bmatrix} 40 & 60 \\ 60 & 120 \end{bmatrix}$. The value of Z_L for which maximum power is transferred to the load is _____ Ω.

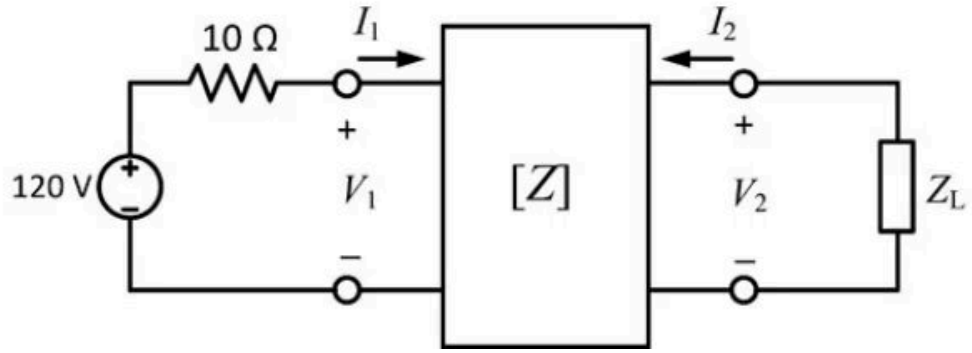

Official answer: **48**

SOLUTION

1. Z-parameter equations with both port currents flowing into the network, as drawn: $V_1 = 40I_1 + 60I_2$ and $V_2 = 60I_1 + 120I_2$.
2. At the input port, KVL around the source loop gives $V_1 = 120 - 10I_1$.
3. By the maximum power transfer theorem, Z_L must equal the complex conjugate of the Thevenin impedance seen at port 2. To find Z_{th}, set the independent source to zero, which leaves only the $10\ \Omega$ resistor across port 1, and drive port 2 with a test current I_2.
4. With the source zeroed, $V_1 = -10I_1$. Substituting into the first equation: $-10I_1 = 40I_1 + 60I_2 \Rightarrow -50I_1 = 60I_2 \Rightarrow I_1 = -1.2\,I_2$.
5. Substituting into the second equation: $V_2 = 60(-1.2I_2) + 120I_2 = -72I_2 + 120I_2 = 48\,I_2$, so $Z_{th} = \dfrac{V_2}{I_2} = 48\ \Omega$.
6. Check with the standard result for a two-port whose port 1 is terminated by a source resistance R_s:
$$Z_{th} = Z_{22} - \frac{Z_{12}Z_{21}}{Z_{11} + R_s} = 120 - \frac{60 \times 60}{40 + 10} = 120 - 72 = 48\ \Omega$$
7. Z_{th} is purely resistive, so $Z_L = Z_{th}^* = 48\ \Omega$. (For completeness: with port 2 open, $I_2 = 0$ and $I_1 = \dfrac{120}{10 + 40} = 2.4$ A, so $V_{th} = 60 \times 2.4 = 144$ V and $P_{max} = \dfrac{144^2}{4 \times 48} = 108$ W.)

KEY IDEA

For maximum power, the load must be the conjugate of the Thevenin impedance seen at the output port. For a two-port described by Z-parameters, with a source resistance R_s on port 1, that impedance is $Z_{th} = Z_{22} - \dfrac{Z_{12}Z_{21}}{Z_{11} + R_s}$. You get it by zeroing the source, writing $V_1 = -R_sI_1$, and eliminating I_1.

WATCH OUT FOR

The usual errors are leaving out the 10 Ω source resistance, which gives $120 - \dfrac{3600}{40} = 30\ \Omega$, or taking $Z_{22} = 120\ \Omega$ on its own as the output impedance. Both ignore how the port-1 termination couples back through $Z_{12}Z_{21}$. A sign slip in $V_1 = -10I_1$ is another trap: with I_1 defined as flowing into the network, the zeroed source loop forces $V_1 = -10I_1$, not $+10I_1$.

Q.16 NAT · 1 MARK

Networks (Electric Circuits) › AC, power & resonance

Q.No. 16 The current in the RL-circuit shown below is $i(t) = 10\cos(5t - \pi/4)$ A.

The value of the inductor **(rounded off to two decimal places)** is _____ H.

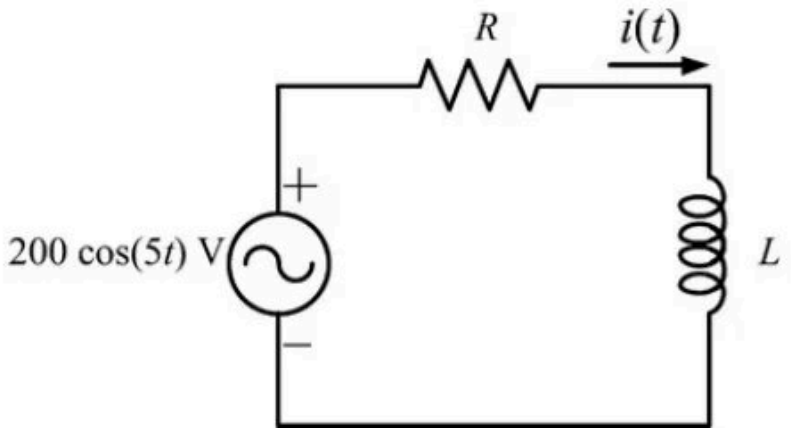

Official answer: **2.80 to 2.85**

SOLUTION

1. Write the source and the current as phasors at $\omega = 5$ rad/s (rms values, amplitude $\div\sqrt{2}$): $V = \dfrac{200}{\sqrt{2}}\angle 0^\circ = 141.42\angle 0^\circ$ V and $I = \dfrac{10}{\sqrt{2}}\angle -45^\circ = 7.071\angle -45^\circ$ A, because $\pi/4 = 45^\circ$.
2. R and L are in series with the source, and $i(t)$ leaves the source's + terminal. So the source voltage equals I times the total impedance:
$$Z = \frac{V}{I} = \frac{141.42\angle 0^\circ}{7.071\angle -45^\circ} = 20\angle 45^\circ\ \Omega$$
(Peak phasors give the same ratio, $200/10 = 20$.) The current lags the voltage by 45°, as it should with an inductive load.
3. Convert Z to rectangular form and match it to the series RL impedance $R + j\omega L$:
$$R + j\omega L = 20\cos 45^\circ + j\,20\sin 45^\circ = 14.142 + j14.142\ \Omega$$
4. Equate the imaginary parts: $\omega L = 14.142\ \Omega$. The real parts also give $R = 14.142\ \Omega$, but R is not needed.
5. Solve for the inductance:
$$L = \frac{14.142}{\omega} = \frac{14.142}{5} = 2\sqrt{2} = 2.828\ \text{H} \approx 2.83\ \text{H}$$

KEY IDEA

In a series RL circuit fed by one sinusoid, V/I gives both the magnitude and the angle of $Z = R + j\omega L$. The phase lag of the current, θ, fixes $\omega L = |Z|\sin\theta$, so $L = \dfrac{|V_m|}{|I_m|}\cdot\dfrac{\sin\theta}{\omega}$. You never need the value of R.

WATCH OUT FOR

Three common slips. (1) Using $|Z| = 20\ \Omega$ as if it were ωL, which gives $L = 4$ H. (2) Forgetting to divide by ω and answering 14.14. (3) Treating the $\pi/4$ lag as $\pi/4$ degrees, or using $\cos 45^\circ$ for the reactive part instead of $\sin 45^\circ$. At exactly 45° the last slip happens to give the right number, but it breaks at any other angle.

Q.17 NAT · 1 MARK

Analog Electronics › Diode circuits

Q.No. 17

In the circuit shown below, all the components are ideal and the input voltage is sinusoidal. The magnitude of the steady-state output V_o **(rounded off to two decimal places)** is _____ V.

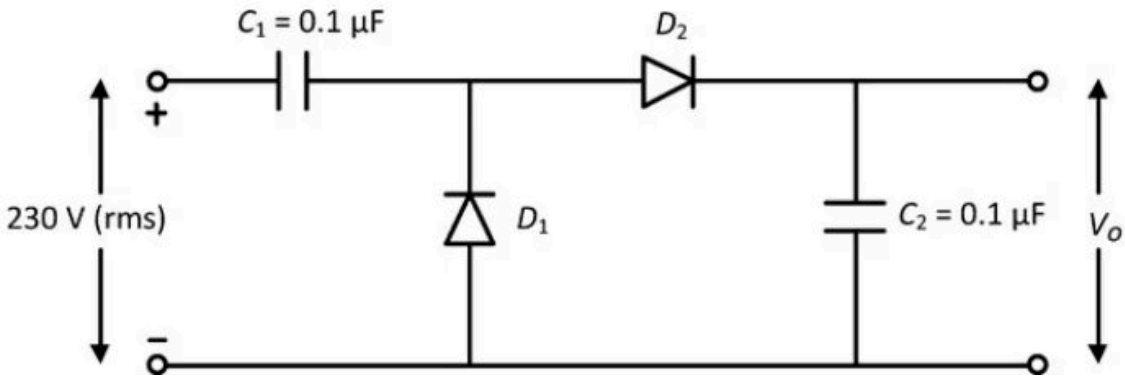

Official answer: **644 to 657**

SOLUTION

1. Peak input: $V_m = 230\sqrt{2} = 325.27$ V. Assumptions: ideal diodes (zero forward drop, zero reverse current), ideal capacitors, and no load across C_2.
2. Let X be the node where C_1, the cathode of D_1 and the anode of D_2 meet. D_1 has its anode at ground, so it conducts whenever v_X tries to go below 0. At the negative input peak, $v_{in} = -V_m$, D_1 holds $v_X = 0$. This charges C_1 to V_m with its input-side plate negative: $v_{in} - v_X = -V_m$.
3. Stage 2 is a peak detector. D_2 conducts whenever $v_X > V_o$ and charges C_2 toward the peak of v_X. With no load, C_2 has no discharge path, because D_2 blocks reverse current. So V_o can only rise.
4. Approach to steady state: in each positive half cycle D_2 moves some charge from C_1 to C_2, and at the next negative peak D_1 tops C_1 back up to V_m. This repeats until V_o equals the peak of v_X. After that D_2 never conducts, C_1 holds V_m, and $v_X = v_{in} + V_m$ swings between 0 and $2V_m$ (a positive clamp).
5. So in steady state C_2 holds the peak of v_X:
$$V_o = 2V_m = 2 \times 230\sqrt{2} = 650.54 \text{ V}$$
6. The capacitor values ($0.1\ \mu$F each) only set how many cycles it takes to reach steady state. They do not change the final no-load value.

KEY IDEA

This is a half-wave voltage doubler. C_1 with D_1 is a clamper that lifts the input so it swings from 0 to $2V_m$. D_2 with C_2 is a peak detector that holds that peak. With ideal parts and no load, $V_o = 2V_m$, and the given rms value must first be turned into a peak: $V_m = \sqrt{2}\,V_{rms}$.

WATCH OUT FOR

Using 230 V as the peak and answering 460 V. Missing the doubling and answering the single peak, 325.27 V. Treating the two equal $0.1\ \mu$F capacitors as a capacitive divider that splits the voltage. In fact, with no load the capacitor values affect only how fast the output settles, not the final value.

Q.18 NAT · 1 MARK

Analog Electronics › Op-amps

Q.No. 18 In the circuit shown below, all the components are ideal. If V_i is +2 V, the current I_o sourced by the op-amp is _____ mA.

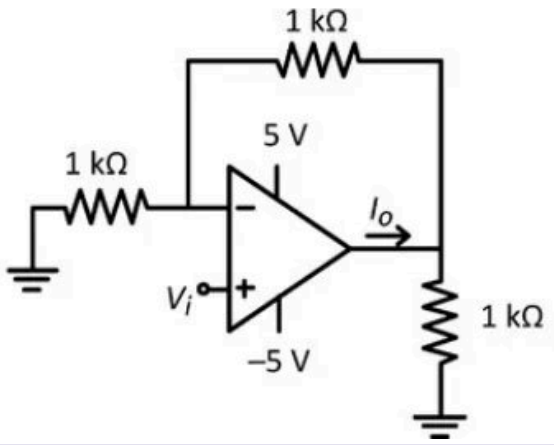

Official answer: **6**

SOLUTION

1. Assumptions: the op-amp is ideal (infinite input resistance and infinite open-loop gain), so no current flows into either input terminal. With negative feedback present, the inputs are at the same potential as long as the output stays within the ± 5 V supply rails.
2. Virtual short: $V_- = V_+ = V_i = 2$ V.
3. Current in the 1 kΩ resistor from the inverting input to ground: $I_1 = \dfrac{2\text{ V}}{1\text{ k}\Omega} = 2$ mA. No current enters the inverting input, so the same 2 mA must come from the output through the 1 kΩ feedback resistor: $I_f = 2$ mA.
4. Output voltage (non-inverting amplifier): $V_o = V_i\left(1 + \dfrac{R_f}{R_1}\right) = 2\left(1 + \dfrac{1\text{ k}\Omega}{1\text{ k}\Omega}\right) = 4$ V. This is inside the ± 5 V rails, so the op-amp is not saturated and the virtual-short assumption holds. Check: $I_f = \dfrac{4-2}{1\text{ k}\Omega} = 2$ mA.
5. Load current: $I_L = \dfrac{V_o}{1\text{ k}\Omega} = \dfrac{4\text{ V}}{1\text{ k}\Omega} = 4$ mA.
6. KCL at the output node: the op-amp output feeds both the load and the feedback path, so

$$I_o = I_L + I_f = 4\text{ mA} + 2\text{ mA} = 6\text{ mA}$$

KEY IDEA

In an ideal op-amp, no current enters the input terminals, but the output terminal can source any current. The output current is the sum of all the currents leaving the output node, which here means the load current plus the feedback-network current. First use the virtual short to find $V_o = 4$ V, then check that it lies inside the ± 5 V rails.

WATCH OUT FOR

Counting only the load current, $V_o/R_L = 4$ mA, and forgetting that the output also drives the feedback divider (2 mA). Another slip is taking the op-amp's zero input current to mean the output current is zero too.

Q.19 NAT · 1 MARK

Digital Electronics › Processors & memory

In an 8085 microprocessor, the number of address lines required to access a 16 K byte memory bank is

_____.

Official answer: **14**

SOLUTION

1. The 8085 memory is byte-organised: each address selects one 8-bit location, because the data bus is 8 bits wide. So a $16\,\mathrm{K}$ byte bank has $16\,\mathrm{K}$ separate locations to address.
2. In memory sizes, $1\,\mathrm{K} = 2^{10} = 1024$. So the number of locations is $N = 16 \times 1024 = 2^4 \times 2^{10} = 2^{14} = 16384$.
3. n address lines can select 2^n different locations, so we need the smallest n with $2^n \geq N$: $n = \log_2 N = \log_2 2^{14} = 14$.
4. Check: the 14 lines A_0 to A_{13} give addresses from $(0000)_{16}$ to $(3\mathrm{FFF})_{16}$, which is exactly 16384 locations. The 8085's other two address lines (A_{14}, A_{15}) are free for chip-select decoding. The answer is **14** address lines.

KEY IDEA

In a byte-addressable memory, n address lines select 2^n locations. So the number of address lines is $\log_2(\text{number of byte locations})$, with $1\,\mathrm{K} = 2^{10}$. The number of lines depends only on how big the memory bank is. The 8085's total of 16 address lines does not change it.

WATCH OUT FOR

Answering 16 because the 8085 has 16 address lines. That is the whole address space ($64\,\mathrm{K}$), not what a $16\,\mathrm{K}$ bank needs. Two other mistakes: counting bits instead of bytes ($16\,\mathrm{K} \times 8$ bits, giving 17), and taking $1\,\mathrm{K} = 1000$ instead of 1024.

Q.20 NAT · 1 MARK

Digital Electronics › ADC & DAC

A 10-bit D/A converter is calibrated over the full range from 0 to 10 V. If the input to the D/A converter is 13A (in hex), the output **(rounded off to three decimal places)** is _____ V.

Official answer: **3.050 to 3.080**

SOLUTION

1. Convert the hex input to decimal: $(13\mathrm{A})_{16} = 1 \times 16^2 + 3 \times 16 + 10 = 256 + 48 + 10 = (314)_{10}$.
2. Calibrated over the full range 0 to 10 V means the all-ones code $(1111111111)_2 = 2^{10} - 1 = 1023$ gives the full-scale output of $10\ \mathrm{V}$, and code 0 gives $0\ \mathrm{V}$.
3. Resolution (step size) $= \dfrac{V_{FS}}{2^n - 1} = \dfrac{10}{1023}\ \mathrm{V} \approx 9.775\ \mathrm{mV}$.
4. Output of a DAC $= (\text{decimal input}) \times (\text{step size})$:
$$V_o = 314 \times \frac{10}{1023} = \frac{3140}{1023} \approx 3.0694\ \mathrm{V}$$
5. Rounded to three decimal places: $V_o \approx 3.069\ \mathrm{V}$.

KEY IDEA

A DAC's output is the decimal value of the input code times one step. "Calibrated over the full range 0 to 10 V" means the largest code, $2^n - 1$, gives 10 V, so one step is $\frac{10}{2^n - 1}$ V. Convert the hex input to decimal first, then multiply by the step.

WATCH OUT FOR

Many students read 13A as decimal 13 or 130, or mis-convert A (it is 10, so 13A in hex is 314 in decimal). Some divide by $2^{10} = 1024$ instead of $2^{10} - 1 = 1023$. That gives $314 \times \frac{10}{1024} \approx 3.066$ V, which also falls inside the official range of 3.050 to 3.080, so the key accepts both conventions. Under the stated calibration (all-ones code = 10 V), 1023 is the correct divisor.

Q.21 NAT · 1 MARK

Electromagnetics › Transmission lines

A transmission line of length $3\lambda/4$ and having a characteristic impedance of $50\ \Omega$ is terminated with a load of $400\ \Omega$. The impedance **(rounded off to two decimal places)** seen at the input end of the transmission line is _____ Ω.

Official answer: **6.25**

SOLUTION

1. The question gives no loss, so treat the line as lossless. Its input impedance is
$$Z_{in} = Z_0 \frac{Z_L + jZ_0 \tan \beta l}{Z_0 + jZ_L \tan \beta l}.$$
2. Electrical length: $\beta l = \frac{2\pi}{\lambda} \cdot \frac{3\lambda}{4} = \frac{3\pi}{2}$. Here $\tan \beta l$ grows without bound, approaching $\pm\infty$ from either side.
3. Divide the numerator and the denominator by $\tan \beta l$ and take the limit:
$$Z_{in} = Z_0 \cdot \frac{jZ_0}{jZ_L} = \frac{Z_0^2}{Z_L}.$$
This is the quarter-wave inverter relation. Because Z_{in} repeats every $\lambda/2$, a $3\lambda/4$ line behaves exactly like a $\lambda/4$ line.
4. Substitute the values:
$$Z_{in} = \frac{(50)^2}{400} = \frac{2500}{400} = 6.25\ \Omega.$$
5. Check: the load is real and $Z_L > Z_0$, so it sits at a voltage maximum, where the impedance is $Z_0 \cdot \mathrm{VSWR}$ and $\mathrm{VSWR} = 400/50 = 8$. An odd number of quarter-waves away the line is at a voltage minimum, where the impedance is $Z_0/\mathrm{VSWR} = 50/8 = 6.25\ \Omega$. This agrees with step 4.

KEY IDEA

On a lossless line, any length that is an odd multiple of $\lambda/4$ ($\lambda/4, 3\lambda/4, 5\lambda/4, \ldots$) makes $\tan \beta l \to \infty$. The line then acts as an impedance inverter: $Z_{in} = Z_0^2/Z_L$. Input impedance repeats every $\lambda/2$, so only the length modulo $\lambda/2$ matters.

WATCH OUT FOR

One common slip is to treat $3\lambda/4$ like a half-wave line and answer $Z_{in} = Z_L = 400\ \Omega$. Only multiples of $\lambda/2$ repeat the load; $3\lambda/4 = \lambda/2 + \lambda/4$ inverts it. Another is to invert the ratio and write $Z_L^2/Z_0 = 3200\ \Omega$. A quick sanity check catches both: a load larger than Z_0 must turn into an input impedance smaller than Z_0 after an odd number of quarter-waves.

Q.22 NAT · 1 MARK

Communications › Information theory

A binary random variable X takes the value $+2$ or -2. The probability $P(X = +2) = \alpha$. The value of α (rounded off to one decimal place), for which the entropy of X is maximum, is _____.

Official answer: **0.5**

SOLUTION

1. X takes two values with probabilities α and $1 - \alpha$. Entropy depends only on these probabilities, not on the values ± 2.
2. Binary entropy: $H(\alpha) = -\alpha \log_2 \alpha - (1 - \alpha) \log_2 (1 - \alpha)$ bits.
3. Set the derivative to zero: $\frac{dH}{d\alpha} = \log_2 \frac{1 - \alpha}{\alpha} = 0$.
4. This gives $\frac{1 - \alpha}{\alpha} = 1$, so $\alpha = 0.5$.
5. Second derivative: $\frac{d^2H}{d\alpha^2} = -\frac{1}{\ln 2}\left(\frac{1}{\alpha} + \frac{1}{1 - \alpha}\right) < 0$ for $0 < \alpha < 1$, so this is a maximum.

6. At $\alpha = 0.5$, $H = 1$ bit, the maximum for a binary source. To one decimal place, $\alpha = 0.5$.

KEY IDEA
Entropy of a discrete variable depends only on its probabilities, not on the values it takes. A binary source has maximum entropy (1 bit) when both outcomes are equally likely.

WATCH OUT FOR
Letting the values $+2$ and -2 influence the answer, for example by maximising the mean or power instead of the entropy. The entropy does not depend on the values.

Q.23 NAT · 1 MARK

Control Systems › Routh–Hurwitz

The loop transfer function of a negative feedback system is

$$G(s)H(s) = \frac{K(s+11)}{s(s+2)(s+8)}.$$

The value of K, for which the system is marginally stable, is _____.

Official answer: **160**

SOLUTION

1. **Characteristic equation.** For negative feedback, $1 + G(s)H(s) = 0$:
$$s(s+2)(s+8) + K(s+11) = 0.$$
Since $s(s+2)(s+8) = s^3 + 10s^2 + 16s$, this becomes
$$s^3 + 10s^2 + (16+K)s + 11K = 0.$$
2. **Routh array:**
$$\begin{array}{lll} s^3: & 1 & 16+K \\ s^2: & 10 & 11K \\ s^1: & \dfrac{10(16+K) - 11K}{10} = \dfrac{160-K}{10} & \\ s^0: & 11K & \end{array}$$
3. **Stability conditions** (no sign change in the first column): the s^0 row needs $K > 0$, and the s^1 row needs $160 - K > 0$. So the system is stable for $0 < K < 160$.
4. **Marginal stability:** at $K = 160$ the s^1 row becomes entirely zero, which signals a pair of roots on the $j\omega$-axis.
5. **Auxiliary equation** from the s^2 row: $10s^2 + 11(160) = 0 \Rightarrow s^2 = -176 \Rightarrow s = \pm j\sqrt{176} \approx \pm j13.27\ \text{rad/s}$.
6. **Check:** at $K = 160$ the characteristic polynomial is $s^3 + 10s^2 + 176s + 1760 = (s^2 + 176)(s + 10)$. The roots are $s = -10$ and $s = \pm j13.27$. The imaginary pair is simple (not repeated) and the third root is in the left half-plane, so the system oscillates steadily: it is marginally stable.
7. Therefore $K = 160$.

KEY IDEA

Build the Routh array of $s^3 + 10s^2 + (16 + K)s + 11K$. Marginal stability happens at the value of K that turns the s^1 row entirely to zero, provided the other first-column entries stay positive. The auxiliary equation from the s^2 row then gives the $j\omega$-axis roots and the oscillation frequency.

WATCH OUT FOR

Forgetting the zero term $K(s + 11)$ when forming the characteristic equation. This drops the Ks term or the $11K$ constant and gives a wrong s^1 entry. Another mistake is using the third-order shortcut $a_2a_1 = a_3a_0$ with the coefficients in the wrong order: the correct form is $10(16 + K) = 1 \cdot 11K$, which gives $K = 160$. Some students also answer $K = 0$. That makes the s^0 row zero, which only puts a root at the origin (the open-loop pole at $s = 0$), so it does not give the sustained oscillation the question asks about.

Q.24 NAT · 1 MARK

Communications › Random processes

The random variable $Y = \int_{-\infty}^{\infty} W(t)\phi(t)\,dt$, where $\phi(t) = 1$ for $5 \le t \le 7$ and 0 otherwise, and $W(t)$ is a real white Gaussian noise process with two-sided power spectral density $S_W(f) = 3\ \mathrm{W/Hz}$ for all f. The variance of Y is _____.

Official answer: **6**

SOLUTION

1. The two-sided power spectral density is $S_W(f) = 3\ \mathrm{W/Hz}$ for all f, so $N_0/2 = 3$. The autocorrelation is the inverse Fourier transform of this flat spectrum: $R_W(\tau) = 3\,\delta(\tau)$.
2. $W(t)$ is zero-mean white Gaussian noise, so $E[Y] = \int \phi(t)\,E[W(t)]\,dt = 0$. Therefore $\mathrm{Var}(Y) = E[Y^2]$.
3. Write Y^2 as a double integral and take the expectation:
$$E[Y^2] = \iint \phi(t)\,\phi(s)\,R_W(t - s)\,dt\,ds = 3\iint \phi(t)\,\phi(s)\,\delta(t - s)\,dt\,ds$$
4. The delta function sifts out $s = t$ in the inner integral, which gives
$$E[Y^2] = 3\int_{-\infty}^{\infty} \phi^2(t)\,dt$$
5. $\phi(t)$ equals 1 on $5 \le t \le 7$ and 0 elsewhere, so $\phi^2(t) = \phi(t)$. Then $\int \phi^2\,dt = 7 - 5 = 2$, the energy of the pulse.
6. $$\mathrm{Var}(Y) = 3 \times 2 = 6$$

KEY IDEA

Integrating white noise against a deterministic window $\phi(t)$ gives a zero-mean random variable. Its variance is the two-sided PSD level times the energy of the window: $\mathrm{Var}(Y) = S_W \int \phi^2(t)\,dt$.

WATCH OUT FOR

Using N_0 in place of $N_0/2$. The 3 W/Hz given here is already the two-sided level, so using $2 \times 3 = 6$ as the delta weight would give 12. Another slip is to take the window length as 7 instead of $7 - 5 = 2$.

Q.25 NAT · 1 MARK

Engineering Mathematics › Probability & statistics

The two sides of a *fair* coin are labelled as 0 and 1. The coin is tossed two times independently. Let M and N denote the labels corresponding to the outcomes of those tosses. For a random variable X, defined as $X = \min(M, N)$, the expected value $E(X)$ **(rounded off to two decimal places)** is _____.

Official answer: **0.25**

SOLUTION

1. Sample space for two independent tosses of a fair coin: $(M, N) \in \{(0,0), (0,1), (1,0), (1,1)\}$. The coin is fair and the tosses are independent, so each outcome has probability $\frac{1}{2} \cdot \frac{1}{2} = \frac{1}{4}$.

2. Evaluate $X = \min(M, N)$ on each outcome: $\min(0,0) = 0$, $\min(0,1) = 0$, $\min(1,0) = 0$, $\min(1,1) = 1$.
3. So X takes only the values 0 and 1, and $X = 1$ only when both tosses show 1. By independence, $P(X = 1) = P(M = 1)\,P(N = 1) = \frac{1}{2} \cdot \frac{1}{2} = \frac{1}{4}$, and $P(X = 0) = 1 - \frac{1}{4} = \frac{3}{4}$.
4. Definition of expectation for a discrete random variable, $E(X) = \sum x\,P(X = x)$:

$$E(X) = 0 \cdot \frac{3}{4} + 1 \cdot \frac{1}{4} = \frac{1}{4} = 0.25$$

KEY IDEA

For 0/1 variables, $\min(M, N)$ equals the product MN: it is 1 only when both are 1. So X is Bernoulli with $p = P(M = 1)P(N = 1) = \frac{1}{4}$, and the mean of a Bernoulli variable is p. Here $E(X) = E(MN) = E(M)E(N) = \frac{1}{2} \cdot \frac{1}{2}$, which uses the independence of the tosses.

WATCH OUT FOR

Answering 0.75 by finding $P(X = 0)$ when the question asks for $E(X)$, or mixing up min with max: $\max(M, N)$ is 1 in three of the four outcomes and gives $E = 0.75$. A second mistake is writing $E(\min(M, N)) = \min(E(M), E(N)) = 0.5$. Expectation does not commute with a nonlinear function like min.

Q.26 MCQ · 2 MARKS

Engineering Mathematics › Linear algebra

Consider the following system of linear equations.

$$x_1 + 2x_2 = b_1\ ; \quad 2x_1 + 4x_2 = b_2\ ; \quad 3x_1 + 7x_2 = b_3\ ; \quad 3x_1 + 9x_2 = b_4$$

Which one of the following conditions ensures that a solution exists for the above system?

(A) $b_2 = 2b_1$ and $6b_1 - 3b_3 + b_4 = 0$

(B) $b_3 = 2b_1$ and $6b_1 - 3b_3 + b_4 = 0$

(C) $b_2 = 2b_1$ and $3b_1 - 6b_3 + b_4 = 0$

(D) $b_3 = 2b_1$ and $3b_1 - 6b_3 + b_4 = 0$

Official answer: **A**

SOLUTION

1. A solution exists exactly when the system is consistent, i.e. $\text{rank}(A) = \text{rank}([A \mid b])$. The coefficient matrix is $A = \begin{bmatrix} 1 & 2 \\ 2 & 4 \\ 3 & 7 \\ 3 & 9 \end{bmatrix}$. Rows 1 and 3 are independent because $1 \cdot 7 - 2 \cdot 3 = 1 \neq 0$, and A has only 2 columns, so $\text{rank}(A) = 2$. With 4 equations and rank 2, there are $4 - 2 = 2$ independent conditions on b.
2. First condition: the left side of equation 2 is exactly twice the left side of equation 1, $2x_1 + 4x_2 = 2(x_1 + 2x_2)$. For consistency the right sides must satisfy the same relation: $b_2 = 2b_1$.
3. Second condition: solve equations 1 and 3 for the unique (x_1, x_2). Subtracting $3\times$(eq. 1) from eq. 3 gives $x_2 = b_3 - 3b_1$. Then $x_1 = b_1 - 2x_2 = b_1 - 2(b_3 - 3b_1) = 7b_1 - 2b_3$.
4. Substitute into equation 4:

$$3x_1 + 9x_2 = 3(7b_1 - 2b_3) + 9(b_3 - 3b_1) = 21b_1 - 6b_3 + 9b_3 - 27b_1 = -6b_1 + 3b_3$$

Consistency requires this to equal b_4, so $-6b_1 + 3b_3 = b_4$, i.e. $6b_1 - 3b_3 + b_4 = 0$.
5. Cross-check with the row dependency: $6(1, 2) - 3(3, 7) + 1(3, 9) = (6 - 9 + 3,\ 12 - 21 + 9) = (0, 0)$. The same combination applied to the right-hand side has to vanish, which again gives $6b_1 - 3b_3 + b_4 = 0$.
6. The two conditions are also sufficient. If they hold, the (x_1, x_2) found from equations 1 and 3 satisfies equation 2 (because $2x_1 + 4x_2 = 2b_1 = b_2$) and equation 4 (step 4), so a solution exists.

7. Both conditions, $b_2 = 2b_1$ and $6b_1 - 3b_3 + b_4 = 0$, appear together only in option (A). Options (B) and (D) drop the required $b_2 = 2b_1$. Option (C) replaces the second condition with $3b_1 - 6b_3 + b_4 = 0$, which does not guarantee a solution: for example $b = (1, 2, 0, -3)$ satisfies (C), but $6b_1 - 3b_3 + b_4 = 3 \neq 0$, so that system has no solution.

KEY IDEA

A system $Ax = b$ is consistent exactly when b satisfies every linear dependency among the rows of A. Here $\text{rank}(A) = 2$ with 4 equations, so there are two such dependencies: row 2 equals $2\times$ row 1, and $6\,R_1 - 3\,R_3 + R_4 = 0$. The right-hand side has to obey the same two relations.

WATCH OUT FOR

Spotting only the obvious condition $b_2 = 2b_1$ and then guessing the second one, or getting a sign wrong when eliminating. Solving equations 1 and 3 gives $x_2 = b_3 - 3b_1$ and $x_1 = 7b_1 - 2b_3$. Substituting into equation 4 gives $3b_3 - 6b_1 = b_4$, which is $6b_1 - 3b_3 + b_4 = 0$, not $3b_1 - 6b_3 + b_4 = 0$. Also watch for option (B), which writes $b_3 = 2b_1$ in place of $b_2 = 2b_1$.

Q.27 MCQ · 2 MARKS

Engineering Mathematics › Differential equations

Which one of the following options contains two solutions of the differential equation $\dfrac{dy}{dx} = (y-1)x$?

(A) $\ln|y-1| = 0.5x^2 + C$ and $y = 1$

(B) $\ln|y-1| = 2x^2 + C$ and $y = 1$

(C) $\ln|y-1| = 0.5x^2 + C$ and $y = -1$

(D) $\ln|y-1| = 2x^2 + C$ and $y = -1$

Official answer: **A**

SOLUTION

1. The equation $\dfrac{dy}{dx} = (y-1)x$ is **variables separable**: the right side is a function of y multiplied by a function of x.
2. For $y \neq 1$, separate the variables:
$$\frac{dy}{y-1} = x\,dx$$
3. Integrate both sides:
$$\int \frac{dy}{y-1} = \int x\,dx \;\Rightarrow\; \ln|y-1| = \frac{x^2}{2} + C = 0.5x^2 + C$$
The coefficient of x^2 is 0.5, not 2, which rules out (B) and (D). (Check: differentiating $\ln|y-1| = 0.5x^2 + C$ gives $\dfrac{1}{y-1}\dfrac{dy}{dx} = x$, i.e. $\dfrac{dy}{dx} = (y-1)x$.)
4. **Constant (equilibrium) solution:** dividing by $y-1$ assumed $y \neq 1$, so $y = 1$ must be checked separately. LHS $= \dfrac{d}{dx}(1) = 0$ and RHS $= (1-1)x = 0$, so $y = 1$ satisfies the equation for every x. It is not contained in $\ln|y-1| = 0.5x^2 + C$ for any finite C, which is why it is listed as a second solution.
5. Check $y = -1$: LHS $= 0$ but RHS $= (-1-1)x = -2x$, which is not zero for $x \neq 0$. So $y = -1$ is **not** a solution, which rules out (C).
6. The two solutions are $\ln|y-1| = 0.5x^2 + C$ and $y = 1$: option **(A)**.

KEY IDEA

Separate the variables to get the general family $\ln|y-1| = \frac{1}{2}x^2 + C$. Then remember that dividing by $y-1$ threw away the case $y=1$. Substituting it back shows that the constant $y=1$ is also a solution.

WATCH OUT FOR

There are two traps. One is getting the coefficient wrong when integrating $x\,dx$ (it gives $x^2/2$, not $2x^2$). The other is picking $y=-1$ as the constant solution. The constant solution is the root of the y-factor, $y-1=0$, so it is $y=1$. Put any candidate constant back into the equation: $y=-1$ gives $0=-2x$, which fails.

Q.28 MCQ · 2 MARKS

Networks (Electric Circuits) › AC, power & resonance

Q.No. 28 The current I in the given network is

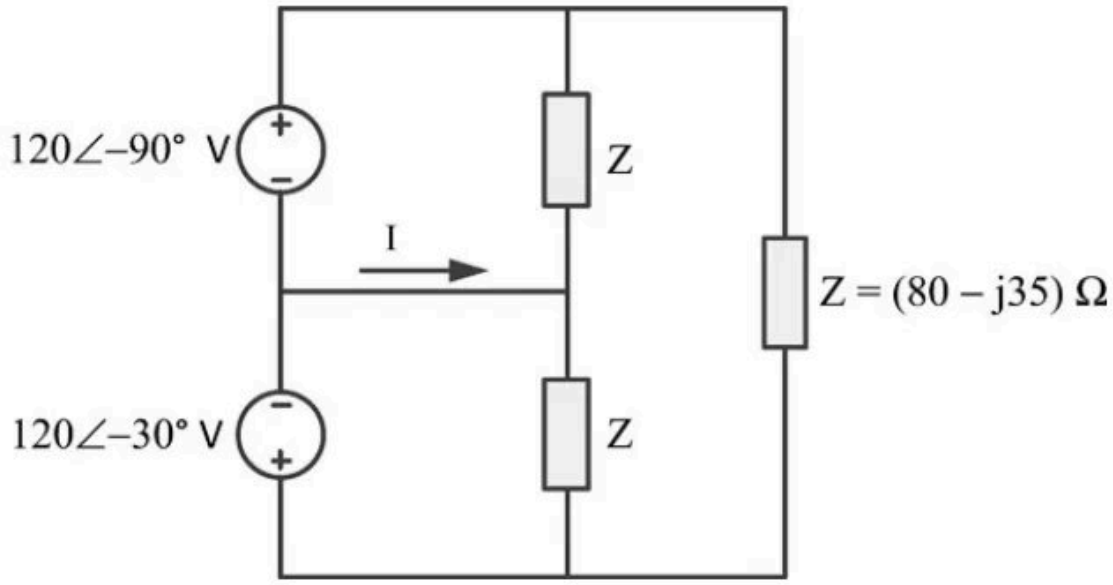

(A) 0 A.

(B) $2.38\angle -96.37^\circ$ A.

(C) $2.38\angle 143.63^\circ$ A.

(D) $2.38\angle -23.63^\circ$ A.

Official answer: **C**

SOLUTION

1. **Reference and node voltages.** The wire carrying I joins M and J directly, so they are the same node. Take $V_M = V_J = 0$. The upper source has + at T and – at M, so $V_T = 120\angle -90^\circ$ V. The lower source has – at M and + at B, so $V_B = +120\angle -30^\circ$ V.
2. **Currents in the two middle impedances (Ohm's law).** Take downward as positive. Upper Z (from T to J): $I_{\text{up}} = \dfrac{V_T - V_J}{Z} = \dfrac{120\angle -90^\circ}{Z}$. Lower Z (from J to B): $I_{\text{low}} = \dfrac{V_J - V_B}{Z} = -\dfrac{120\angle -30^\circ}{Z}$.
3. **KCL at node J.** Two currents enter J: I from the wire and I_{up} from above. One current leaves: I_{low} downward. So $I + I_{\text{up}} = I_{\text{low}}$, which gives
$$I = -\frac{120\angle -90^\circ + 120\angle -30^\circ}{Z}$$
The right-hand impedance is connected directly across T–B, and the two series sources fix that voltage. Its current flows around the source loop and never enters node J, so it does not appear in this KCL.

4. **Phasor sum.** $120\angle -30^\circ + 120\angle -90^\circ = (103.92 - j60) + (-j120) = 103.92 - j180 = 207.85\angle -60^\circ$ V. With the minus sign, the numerator is $-207.85\angle -60^\circ = 207.85\angle 120^\circ$ V.
5. **Impedance in polar form.** $Z = 80 - j35 = \sqrt{80^2 + 35^2}\angle -\tan^{-1}\frac{35}{80} = 87.32\angle -23.63^\circ\ \Omega$.
6. **Divide.**
$$I = \frac{207.85\angle 120^\circ}{87.32\angle -23.63^\circ} = 2.38\angle(120^\circ + 23.63^\circ) = 2.38\angle 143.63^\circ\ \text{A}$$
In rectangular form this is $(-1.917 + j1.412)$ A.
7. **Match to the options.** $I = 2.38\angle 143.63^\circ$ A, which is option (C).

KEY IDEA

The wire carrying I puts M and J at the same potential. Take that node as the reference. The two sources then fix V_T = 120∠−90° V and V_B = +120∠−30° V directly, and KCL at J involves only the two middle impedances, giving I = −(V_T + V_B)/Z. The right-hand Z sits straight across the sources and never touches node J, so it does not enter the calculation for I.

WATCH OUT FOR

Misreading the lower source's polarity. Its + terminal is at the bottom, so V_B = +120∠−30° relative to M, and the two phasors ADD in the numerator. Getting that sign wrong gives the wrong magnitude. A second trap is option (A): treating the two identical Z's as a balanced divider and concluding no current flows in the M–J wire. That would need V_T = −V_B, and the phase difference between the sources rules it out. A third mistake is adding the angles of the numerator and Z instead of subtracting them when dividing phasors.

Q.29 MCQ · 2 MARKS

Signals and Systems › DTFT & DFT

A finite duration discrete-time signal $x[n]$ is obtained by sampling the continuous-time signal $x(t) = \cos(200\pi t)$ at sampling instants $t = n/400$, $n = 0, 1, \cdots, 7$. The 8-point discrete Fourier transform (DFT) of $x[n]$ is defined as

$$X[k] = \sum_{n=0}^{7} x[n]\, e^{-j\frac{\pi kn}{4}}, \qquad k = 0, 1, \cdots, 7.$$

Which one of the following statements is TRUE?

(A) All $X[k]$ are non-zero.

(B) Only $X[4]$ is non-zero.

(C) Only $X[2]$ and $X[6]$ are non-zero.

(D) Only $X[3]$ and $X[5]$ are non-zero.

Official answer: **C**

SOLUTION

1. **Sample the signal.** With $t = n/400$: $x[n] = \cos\left(200\pi \cdot \frac{n}{400}\right) = \cos\left(\frac{\pi n}{2}\right)$, so for $n = 0, \ldots, 7$ the samples are $1, 0, -1, 0, 1, 0, -1, 0$.
2. **Write it at a DFT bin frequency.** The DFT kernel is $e^{-j\frac{\pi kn}{4}} = e^{-j\frac{2\pi}{8}kn}$. Since $\frac{\pi}{2} = \frac{2\pi \cdot 2}{8}$, $x[n] = \cos\left(\frac{2\pi \cdot 2\, n}{8}\right)$: exactly 2 whole cycles fit in the 8 samples, so the tone sits exactly on bin $k_0 = 2$ and nothing leaks into other bins. (Equivalently: $f_s = 400$ Hz, bin spacing $f_s/N = 50$ Hz, and 100 Hz falls exactly on bin 2.)
3. **Euler's form.** $x[n] = \frac{1}{2}e^{j\frac{2\pi}{8}2n} + \frac{1}{2}e^{-j\frac{2\pi}{8}2n} = \frac{1}{2}e^{j\frac{2\pi}{8}2n} + \frac{1}{2}e^{j\frac{2\pi}{8}6n}$, since $e^{j\frac{2\pi}{8}8n} = 1$, i.e. $-2 \equiv 6 \pmod 8$.
4. **Orthogonality of DFT exponentials.** $\sum_{n=0}^{N-1} e^{j\frac{2\pi}{N}(m-k)n} = N$ if $k \equiv m \pmod N$, and 0 otherwise.

5. **Result.** Substituting, $X[k]=\frac{1}{2}\sum_{n=0}^{7}e^{j\frac{2\pi}{8}(2-k)n}+\frac{1}{2}\sum_{n=0}^{7}e^{j\frac{2\pi}{8}(6-k)n}=4\,\delta[k-2]+4\,\delta[k-6]$, so $X[2]=X[6]=4$ and every other $X[k]=0$.
6. **Direct check on the bins that decide the options.** Only even n contribute, with $x[0]=x[4]=1$, $x[2]=x[6]=-1$. $X[0]=1-1+1-1=0$ (rules out A). $X[4]=\sum x[n](-1)^n=1-1+1-1=0$ (rules out B). $X[2]=\sum x[n](-j)^n=1\cdot1+(-1)(-1)+1\cdot1+(-1)(-1)=4$ and $X[6]=\sum x[n](j)^n=1+1+1+1=4$ (rules out D, which says only $X[3]$ and $X[5]$ are non-zero). Only $X[2]$ and $X[6]$ are non-zero, which is option (C).

KEY IDEA

Sampling at $400\ \text{Hz}$ gives $x[n]=\cos(\pi n/2)=\cos\left(\frac{2\pi\cdot 2n}{8}\right)$, which completes exactly 2 cycles in the 8-point window. A cosine sitting exactly on a DFT bin k_0 puts all its energy into bins k_0 and $N-k_0$, each with value $N/2$. Here that means $X[2]=X[6]=4$ and every other bin is zero, with no leakage.

WATCH OUT FOR

Picking bin 4 by treating $\pi/2$ as "half of π" and so half of $N=8$, instead of writing $\pi/2=2\pi k_0/8$, which gives $k_0=2$. The other common mistake is forgetting the negative-frequency half: the $e^{-j\frac{2\pi}{8}2n}$ term lands at $k=8-2=6$, not at $k=-2$. Expecting leakage into every bin (option A) is also wrong here, because an integer number of cycles fits in the window.

Q.30 MCQ · 2 MARKS

Control Systems › State space

Q.No. 30 For the given circuit, which one of the following is the correct state equation?

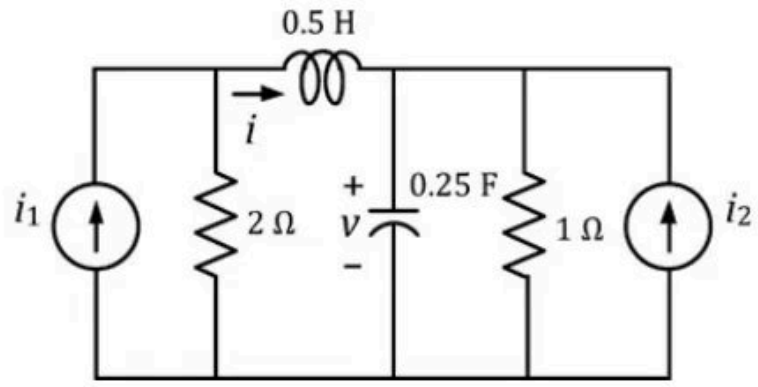

(A) $\frac{d}{dt}\begin{bmatrix}v\\i\end{bmatrix}=\begin{bmatrix}-4 & 4\\-2 & -4\end{bmatrix}\begin{bmatrix}v\\i\end{bmatrix}+\begin{bmatrix}0 & 4\\4 & 0\end{bmatrix}\begin{bmatrix}i_1\\i_2\end{bmatrix}$

(B) $\frac{d}{dt}\begin{bmatrix}v\\i\end{bmatrix}=\begin{bmatrix}-4 & -4\\-2 & 4\end{bmatrix}\begin{bmatrix}v\\i\end{bmatrix}+\begin{bmatrix}4 & 4\\4 & 0\end{bmatrix}\begin{bmatrix}i_1\\i_2\end{bmatrix}$

(C) $\frac{d}{dt}\begin{bmatrix}v\\i\end{bmatrix}=\begin{bmatrix}4 & -4\\-2 & -4\end{bmatrix}\begin{bmatrix}v\\i\end{bmatrix}+\begin{bmatrix}0 & 4\\4 & 4\end{bmatrix}\begin{bmatrix}i_1\\i_2\end{bmatrix}$

(D) $\frac{d}{dt}\begin{bmatrix}v\\i\end{bmatrix}=\begin{bmatrix}-4 & -4\\-2 & -4\end{bmatrix}\begin{bmatrix}v\\i\end{bmatrix}+\begin{bmatrix}4 & 0\\0 & 4\end{bmatrix}\begin{bmatrix}i_1\\i_2\end{bmatrix}$

Official answer: **A**

SOLUTION

1. Take the energy-storage variables as the states: the capacitor voltage v and the inductor current i. Call the voltage of the left top node (the node shared by i_1, the $2\,\Omega$ resistor and the inductor's left end) v_A, measured from the bottom rail.

2. KCL at the left node: i_1 enters, while the $2\,\Omega$ current and the inductor current i leave.
$$i_1 = \frac{v_A}{2} + i \;\Rightarrow\; v_A = 2i_1 - 2i$$
3. KVL around the loop formed by the $2\,\Omega$ branch, the inductor and the capacitor gives the inductor voltage (positive at its left end, the direction of i) as $v_A - v$:
$$0.5\,\frac{di}{dt} = v_A - v = 2i_1 - 2i - v \;\Rightarrow\; \frac{di}{dt} = -2v - 4i + 4i_1$$
4. KCL at the right top node: i and i_2 enter; the capacitor current $0.25\,\dfrac{dv}{dt}$ and the $1\,\Omega$ current $v/1$ leave.
$$i + i_2 = 0.25\,\frac{dv}{dt} + v \;\Rightarrow\; \frac{dv}{dt} = -4v + 4i + 4i_2$$
5. Assemble in the order $[v,\ i]^T$ with inputs $[i_1,\ i_2]^T$:
$$\frac{d}{dt}\begin{bmatrix} v \\ i \end{bmatrix} = \begin{bmatrix} -4 & 4 \\ -2 & -4 \end{bmatrix}\begin{bmatrix} v \\ i \end{bmatrix} + \begin{bmatrix} 0 & 4 \\ 4 & 0 \end{bmatrix}\begin{bmatrix} i_1 \\ i_2 \end{bmatrix}$$
6. Check against the options. $\dot{v}$ has no i_1 term ($B_{11} = 0$) because i_1 reaches the capacitor node only through the inductor. $\dot{i}$ has no i_2 term ($B_{22} = 0$) because i_2 is in parallel with the capacitor, so it changes v, not i directly. The B matrix $\begin{bmatrix} 0 & 4 \\ 4 & 0 \end{bmatrix}$ appears in (A) and (B), but only (A) also has $A = \begin{bmatrix} -4 & 4 \\ -2 & -4 \end{bmatrix}$. The answer is (A).

KEY IDEA

To get a circuit's state equations, write KVL across each inductor to find $L\,\dfrac{di_L}{dt}$ and KCL at each capacitor node to find $C\,\dfrac{dv_C}{dt}$. Then remove every non-state quantity (here the left node voltage v_A) using the resistor and source relations. The signs of the diagonal entries (both negative for a passive RLC network) and where the zeros sit in B are quick checks that rule out most options.

WATCH OUT FOR

Treating v_A as if it equals $2i_1$ and forgetting that the inductor current also flows out of the left node. That drops the $-4i$ term in $\dot{i}$. The other common error is getting the sign of the coupling terms wrong: current i charges the capacitor, so $\dot{v}$ has $+4i$, while v opposes the inductor current, so $\dot{i}$ has $-2v$. Flipping either sign leads to (B), (C) or (D).

Q.31 MCQ · 2 MARKS

Electronic Devices › P-N junction

Q.No. 31 A one-sided abrupt *pn* junction diode has a depletion capacitance C_D of 50 pF at a reverse bias of 0.2 V. The plot of $1/C_D^2$ versus the applied voltage V for this diode is a straight line as shown in the figure below. The slope of the plot is _____ $\times 10^{20}\ \mathrm{F^{-2}V^{-1}}$.

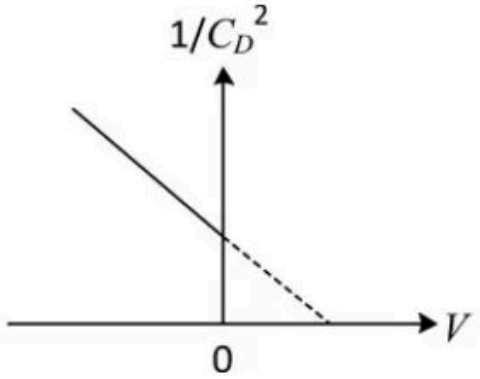

(A) -5.7

(B) -3.8

(C) -1.2

(D) -0.4

Official answer: **Marks to all**

Q.32 MCQ · 2 MARKS

Electronic Devices › MOS devices

Q.No. 32 The band diagram of a p-type semiconductor with a band-gap of 1 eV is shown. Using this semiconductor, a MOS capacitor having V_{TH} of $-0.16\,\text{V}$, C'_{ox} of $100\,\text{nF/cm}^2$ and a metal work function of 3.87 eV is fabricated. There is no charge within the oxide. If the voltage across the capacitor is V_{TH}, the magnitude of depletion charge per unit area (in C/cm^2) is

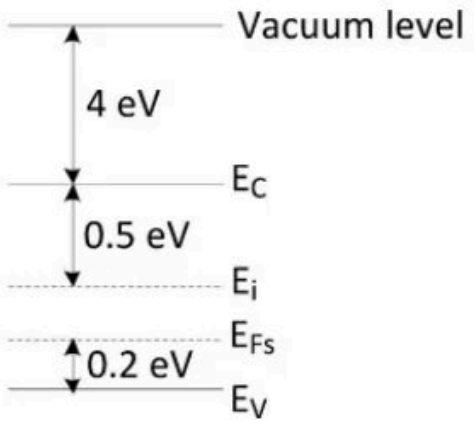

(A) 1.70×10^{-8}

(B) 0.52×10^{-8}

(C) 1.41×10^{-8}

(D) 0.93×10^{-8}

Official answer: **A**

SOLUTION

1. From the band diagram, the electron affinity is $\chi = 4\,\text{eV}$ (vacuum level to E_C).
2. Using $E_C - E_i = 0.5\,\text{eV}$, $E_{Fs} - E_V = 0.2\,\text{eV}$, and band-gap $= 1\,\text{eV}$: $E_i - E_V = 0.5\,\text{eV}$, so $E_i - E_{Fs} = 0.5 - 0.2 = 0.3\,\text{eV}$.
3. Semiconductor work function: $\Phi_s = \chi + (E_C - E_i) + (E_i - E_{Fs}) = 4 + 0.5 + 0.3 = 4.8\,\text{eV}$.
4. Flat-band voltage: $V_{FB} = \Phi_m - \Phi_s = 3.87 - 4.8 = -0.93\,\text{V}$.
5. Bulk potential magnitude: $\phi_F = \dfrac{E_i - E_{Fs}}{q} = 0.3\,\text{V}$, so $2\phi_F = 0.6\,\text{V}$.
6. Threshold-voltage relation for a p-substrate MOS capacitor with no oxide charge:
$$V_{TH} = V_{FB} + 2\phi_F + \frac{Q_{dep}}{C'_{ox}}$$
7. Substituting: $-0.16 = -0.93 + 0.6 + \dfrac{Q_{dep}}{C'_{ox}} \Rightarrow \dfrac{Q_{dep}}{C'_{ox}} = 0.17\,\text{V}$.
8. $Q_{dep} = 0.17 \times 100\,\text{nF/cm}^2 = 17\,\text{nC/cm}^2 = 1.70 \times 10^{-8}\,\text{C/cm}^2$, matching option A.

KEY IDEA

MOS threshold voltage relation for a p-type substrate: $V_{TH} = V_{FB} + 2\phi_F + \frac{Q_{dep}}{C'_{ox}}$, where $V_{FB} = \Phi_m - \Phi_s$ is obtained directly from the semiconductor band diagram (electron affinity plus the gap from E_C down to E_{Fs}).

WATCH OUT FOR

Misreading the band diagram: adding instead of subtracting the 0.2 eV arrow (which points from E_V up to E_{Fs}), giving $E_i - E_{Fs} = 0.8$ eV instead of 0.3 eV, or forgetting that the semiconductor work function must include the full gap from E_C to E_{Fs} (not just to E_i) when computing Φ_s.

Q.33 MCQ · 2 MARKS

Electronic Devices › BJT

Q.No. 33 The base of an *npn* BJT T1 has a linear doping profile $N_B(x)$ as shown below. The base of another *npn* BJT T2 has a uniform doping N_B of 10^{17} cm^{-3}. All other parameters are identical for both the devices. Assuming that the hole density profile is the same as that of doping, the common-emitter current gain of T2 is

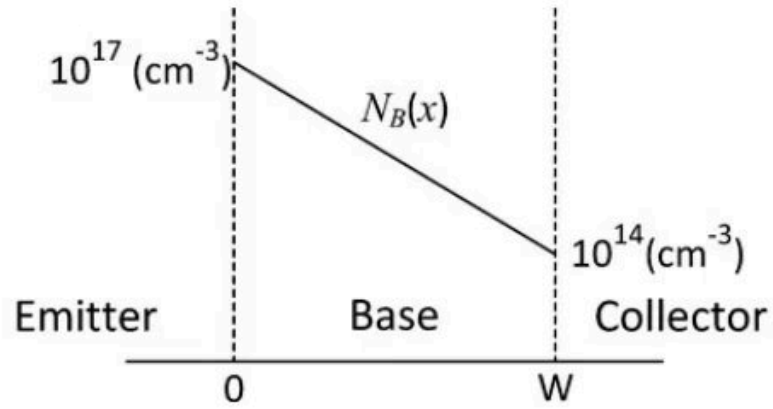

(A) approximately 2.0 times that of T1.

(B) approximately 0.3 times that of T1.

(C) approximately 2.5 times that of T1.

(D) approximately 0.7 times that of T1.

Official answer: **Marks to all**

Q.34 MCQ · 2 MARKS

Electronic Devices › Optoelectronics

A pn junction solar cell of area $1.0\ \text{cm}^2$, illuminated uniformly with $100\ \text{mW cm}^{-2}$, has the following parameters: Efficiency $= 15\%$, open circuit voltage $= 0.7$ V, fill factor $= 0.8$, and thickness $= 200\ \mu\text{m}$. The charge of an electron is 1.6×10^{-19} C. The average optical generation rate (in $\text{cm}^{-3}\text{s}^{-1}$) is

(A) 0.84×10^{19}

(B) 5.57×10^{19}

(C) 1.04×10^{19}

(D) 83.60×10^{19}

Official answer: **A**

SOLUTION

1. Since fill factor $FF = \dfrac{V_{oc} I_{sc}}{P_{in} \cdot (\text{area})}$'s numerator equals the maximum output power, and efficiency $\eta = \dfrac{P_{max}}{P_{in} \cdot A}$, combine both definitions of P_{max}: $P_{max} = \eta P_{in} A = FF \cdot V_{oc} I_{sc}$.
2. With $A = 1.0\ \text{cm}^2$ and $P_{in} = 100\ \text{mW cm}^{-2}$: $P_{max} = 0.15 \times 100\ \text{mW cm}^{-2} \times 1.0\ \text{cm}^2 = 15\ \text{mW}$.
3. Solve for the short-circuit current: $I_{sc} = \dfrac{P_{max}}{FF \cdot V_{oc}} = \dfrac{15\ \text{mW}}{0.8 \times 0.7\ \text{V}} = \dfrac{15}{0.56}\ \text{mA} \approx 26.79\ \text{mA}$.
4. Since $A = 1\ \text{cm}^2$, the short-circuit current density equals the current numerically: $J_{sc} \approx 26.79 \times 10^{-3}\ \text{A cm}^{-2}$.
5. Assuming every photogenerated carrier across the cell thickness is collected, the average optical generation rate G (per unit volume, per unit time) relates to J_{sc} by $J_{sc} = q\,G\,t$, so $G = \dfrac{J_{sc}}{q\,t}$.
6. Convert the thickness to centimetres: $t = 200\ \mu\text{m} = 200 \times 10^{-4}\ \text{cm} = 0.02\ \text{cm}$.
7. Substitute: $G = \dfrac{26.79 \times 10^{-3}\ \text{A cm}^{-2}}{1.6 \times 10^{-19}\ \text{C} \times 0.02\ \text{cm}} = \dfrac{26.79 \times 10^{-3}}{3.2 \times 10^{-21}}\ \text{cm}^{-3}\text{s}^{-1}$.
8. $G \approx 8.37 \times 10^{18}\ \text{cm}^{-3}\text{s}^{-1} = 0.84 \times 10^{19}\ \text{cm}^{-3}\text{s}^{-1}$, which is option (A).

KEY IDEA

Link the solar cell's efficiency/fill-factor rating to its short-circuit current density ($P_{max} = \eta P_{in} A = FF \cdot V_{oc} I_{sc}$), then use $J_{sc} = qGt$ (full carrier collection over the cell thickness) to back out the average generation rate.

WATCH OUT FOR

Forgetting to convert the thickness from micrometres to centimetres (or forgetting it at all), and mixing area/current-density units when area is exactly $1\ \text{cm}^2$. Either error shifts the answer by orders of magnitude, landing on option (D) or a value between the given choices.

Q.35 MCQ · 2 MARKS

Analog Electronics › Amplifiers

Q.No. 35 For the BJT in the amplifier shown below, $V_{BE} = 0.7$ V, $kT/q = 26$ mV. Assume that BJT output resistance (r_o) is very high and the base current is negligible. The capacitors are also assumed to be short circuited at signal frequencies. The input v_i is direct coupled. The low frequency voltage gain v_o/v_i of the amplifier is

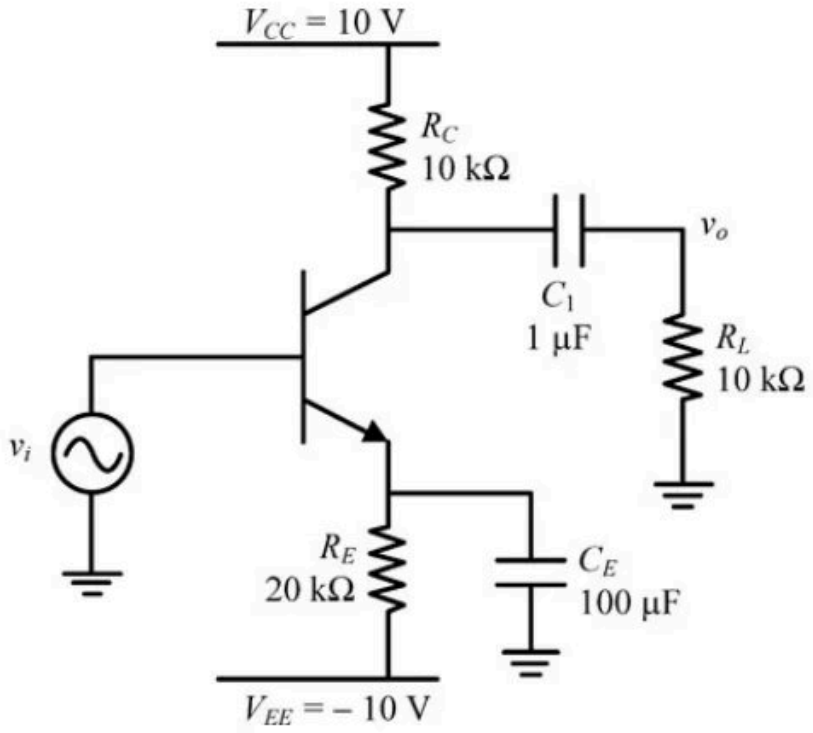

(A) -89.42

(B) -128.21

(C) -178.85

(D) -256.42

Official answer: **A**

SOLUTION

1. **Assumptions.** Hybrid-π model with $r_o \to \infty$ (given), base current negligible so $I_C \approx I_E$, $V_T = kT/q = 26\ \text{mV}$, and all capacitors are open at DC and short at signal frequencies (given).
2. **DC bias.** The source v_i is direct coupled and has no DC component, so the base sits at $V_B = 0$ V. With the capacitors open at DC, the emitter is at $V_E = V_B - V_{BE} = -0.7$ V.
3. **Emitter current (Ohm's law across R_E).**
$$I_E = \frac{V_E - V_{EE}}{R_E} = \frac{-0.7 - (-10)}{20\ \text{k}\Omega} = \frac{9.3\ \text{V}}{20\ \text{k}\Omega} = 0.465\ \text{mA}$$
Base current is negligible, so $I_C \approx I_E = 0.465$ mA.
4. **Check the operating region.** $V_C = 10 - (0.465\ \text{mA})(10\ \text{k}\Omega) = 5.35$ V, so $V_{CE} = 5.35 - (-0.7) = 6.05$ V, well above saturation. The BJT is in the forward-active region, so the small-signal model applies.
5. **Transconductance.**

$$g_m = \frac{I_C}{V_T} = \frac{0.465\ \text{mA}}{26\ \text{mV}} = 17.885\ \text{mA/V}$$

6. **Small-signal circuit.** C_E shorts the emitter to AC ground, so R_E drops out of the signal path. C_1 shorts the collector to v_o, so the collector sees $R_C \parallel R_L = 10\ \text{k}\Omega \parallel 10\ \text{k}\Omega = 5\ \text{k}\Omega$. Because v_i drives the base directly with the emitter at AC ground, $v_{be} = v_i$ (the value of r_π does not affect the gain here).
7. **Common-emitter gain.** The collector current $g_m v_{be}$ flows out of the collector node through $R_C \parallel R_L$, so
$$\frac{v_o}{v_i} = -g_m\,(R_C \parallel R_L) = -(17.885\ \text{mA/V})(5\ \text{k}\Omega) = -89.42$$
8. This matches option (A).

KEY IDEA

The DC base voltage is 0 V because v_i is direct coupled, which fixes $I_E = (0 - 0.7 + 10)/20\ \text{k}\Omega = 0.465\ \text{mA}$ and $g_m = I_C/V_T$. With C_E bypassing R_E and $v_{be} = v_i$, the gain of this common-emitter stage is $-g_m$ times the total AC collector load $R_C \parallel R_L$.

WATCH OUT FOR

Leaving out R_L: C_1 is a short at signal frequencies, so R_L sits in parallel with R_C. Using R_C alone gives $-g_m(10\ \text{k}\Omega) = -178.85$, which is option (C). Other slips are ignoring V_{BE} in the bias ($I_E = 10/20\ \text{k}\Omega = 0.5\ \text{mA}$), and keeping R_E in the gain even though C_E bypasses it.

Q.36 MCQ · 2 MARKS

Digital Electronics › ADC & DAC

Q.No. 36 An enhancement MOSFET of threshold voltage 3 V is being used in the sample and hold circuit given below. Assume that the substrate of the MOS device is connected to -10 V. If the input voltage V_I lies between ± 10 V, the minimum and the maximum values of V_G required for proper sampling and holding respectively, are

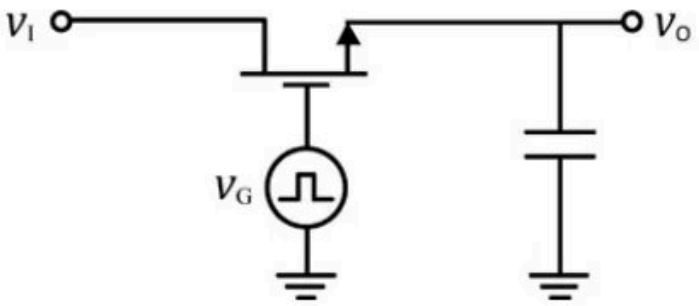

(A) 3 V and -3 V.
(B) 10 V and -10 V.
(C) 13 V and -7 V.
(D) 10 V and -13 V.

Official answer: **C**

SOLUTION

1. Device type. The substrate is tied to -10 V, the most negative voltage anywhere in the circuit, which is how a p-type substrate is biased. So this is an n-channel enhancement MOSFET, which the outward arrow on the symbol confirms, with $V_T = 3$ V. For every terminal voltage in ± 10 V, the n^+ source/drain to p-substrate junctions stay reverse-biased (or at zero bias), so the only question is whether a channel forms.

2. Condition for an n-channel switch to conduct: $V_{GS} = V_G - V_S \geq V_T$. Here the source is whichever channel terminal is at the lower potential. During sampling the switch is ON and V_O follows V_I, so both terminals sit at about V_I.
3. Sampling (switch ON) must work for every input in $-10\ \text{V} \leq V_I \leq +10\ \text{V}$. $V_G - V_I$ is smallest when $V_I = +10\ \text{V}$, so that is the hardest case:
$$V_G - 10 \geq 3 \ \Rightarrow\ V_G \geq 13\ \text{V}$$
The minimum gate voltage for proper sampling is therefore $13\ \text{V}$.
4. Holding (switch OFF) must also work for every case. Now V_I can be anywhere in $\pm 10\ \text{V}$, and the held V_O is also in that range. The channel must not form from whichever terminal is lower, and the lowest either terminal can go is $-10\ \text{V}$. So we need
$$V_G - (-10) \leq 3 \ \Rightarrow\ V_G \leq -7\ \text{V}$$
The maximum gate voltage for proper holding is therefore $-7\ \text{V}$.
5. Check. With $V_G = 13\ \text{V}$, V_{GS} runs from $13 - 10 = 3\ \text{V}$ (at $V_I = +10$) up to $13 + 10 = 23\ \text{V}$ (at $V_I = -10$). It never falls below V_T, so the switch is ON for every input. With $V_G = -7\ \text{V}$, V_{GS} runs from $-7 - 10 = -17\ \text{V}$ up to $-7 + 10 = 3\ \text{V}$. It never exceeds V_T, so the switch stays OFF and the capacitor keeps its charge. (Both values are boundary values, where V_{GS} exactly equals V_T in the worst case.)
6. The required values are $13\ \text{V}$ (minimum, for sampling) and $-7\ \text{V}$ (maximum, for holding). That is option (C).

KEY IDEA

A MOS sampling switch has to be designed for the worst-case input, not the typical one. An n-channel switch conducts while $V_G - V_S \geq V_T$, and its source is whichever terminal is lower. To stay ON for every input, V_G must be V_T above the most positive input: $10 + 3 = 13\ \text{V}$. To stay OFF for every input and every held value, V_G must be no more than V_T above the most negative level: $-10 + 3 = -7\ \text{V}$.

WATCH OUT FOR

Using only the threshold (answer A, $\pm 3\ \text{V}$) and forgetting that the source moves with the signal. Another error is checking both conditions at the same input level, e.g. taking $V_I = +10\ \text{V}$ for holding and getting $V_G \leq 13\ \text{V}$, or subtracting V_T instead of adding it (answer D). For holding, the worst case is the most NEGATIVE channel voltage, because that is where a channel forms most easily.

Q.37 MCQ · 2 MARKS

Analog Electronics › Amplifiers

Q.No. 37

Using the incremental low frequency small-signal model of the MOS device, the Norton equivalent resistance of the following circuit is

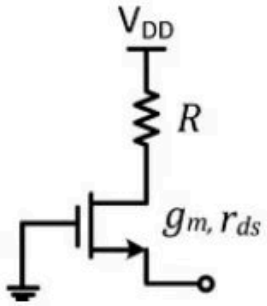

(A) $r_{ds} + R + g_m r_{ds} R$

(B) $\dfrac{r_{ds} + R}{1 + g_m r_{ds}}$

(C) $r_{ds} + \dfrac{1}{g_m} + R$

(D) $r_{ds} + R$

Official answer: **B**

SOLUTION

1. **Small-signal circuit.** To find the Norton resistance, set every independent source to zero. V_{DD} becomes AC ground, so R runs from the drain to ground, and the gate is also at ground. Replace the MOSFET with its low-frequency model: a VCCS $g_m v_{gs}$ from drain to source in parallel with r_{ds}. No body-effect parameter is given, so the body effect is neglected. The Norton resistance R_N is the resistance seen looking into the source terminal.
2. **Test source.** Apply a test voltage v_x at the source and let i_x be the current it drives into the source terminal. Since the gate is at ground, $v_{gs} = 0 - v_x = -v_x$.
3. **One path for the current.** The only way i_x can leave the source node is up through the transistor (VCCS and r_{ds} together) and then down through R to ground. So the drain voltage is $v_d = i_x R$, and the current flowing from drain to source inside the device is $i_d = -i_x$.
4. **Drain-to-source current.** The current from drain to source is the VCCS current plus the r_{ds} current:
$$i_d = g_m v_{gs} + \frac{v_d - v_s}{r_{ds}} \;\Rightarrow\; -i_x = -g_m v_x + \frac{i_x R - v_x}{r_{ds}}$$
5. **Solve.** Multiply by r_{ds}:
$$-i_x r_{ds} = -g_m r_{ds} v_x + i_x R - v_x \;\Rightarrow\; v_x\,(1 + g_m r_{ds}) = i_x\,(r_{ds} + R)$$
6. **Result.**
$$R_N = \frac{v_x}{i_x} = \frac{r_{ds} + R}{1 + g_m r_{ds}}$$
This is option (B).
7. **Limit checks.** As $r_{ds} \to \infty$, $R_N \to \dfrac{1}{g_m}$, the familiar resistance looking into the source of a common-gate or source-follower stage. With $R = 0$, $R_N = \dfrac{r_{ds}}{1 + g_m r_{ds}} = r_{ds} \parallel \dfrac{1}{g_m}$, which is correct for a gate-

grounded device whose drain is at AC ground. Both limits agree.

KEY IDEA

Looking into the source of a MOSFET whose gate is at AC ground, the drain-side resistance $r_{ds} + R$ is divided by $(1 + g_m r_{ds})$, which is about the device's intrinsic gain. So the source is a low-resistance node, close to $1/g_m$ unless the drain load R is comparable to $g_m r_{ds}$ times $1/g_m$. This is the dual of looking into the drain, where the source-side resistance is multiplied up by the same factor.

WATCH OUT FOR

Picking (A), $r_{ds} + R + g_m r_{ds} R$. That has the form of the resistance looking into the DRAIN of a source-degenerated MOSFET, where resistance is multiplied up. Here we look into the SOURCE, and resistance is divided down. Other slips: taking $v_{gs} = +v_x$ instead of $-v_x$, which gives $(r_{ds} + R)/(1 - g_m r_{ds})$, and ignoring the dependent source altogether, which gives (D), $r_{ds} + R$.

Q.38 MCQ · 2 MARKS

Digital Electronics › Number systems

P, Q, and R are the decimal integers corresponding to the 4-bit binary number 1100 considered in signed magnitude, 1's complement, and 2's complement representations, respectively. The 6-bit 2's complement representation of (P + Q + R) is

(A) 110101

(B) 110010

(C) 111101

(D) 111001

Official answer: **A**

SOLUTION

1. **Signed magnitude (P):** the MSB is the sign bit and the other three bits give the magnitude. In 1100 the sign bit is 1 (negative) and the magnitude is $(100)_2 = 4$, so $P = -4$.
2. **1's complement (Q):** the MSB is 1, so the number is negative. Its magnitude is the bitwise complement of the whole word: $\overline{1100} = (0011)_2 = 3$ (here $\overline{\ }$ means complement every bit), so $Q = -3$.
3. **2's complement (R):** the MSB has weight -2^3, so $R = -8 + 4 + 0 + 0 = -4$. As a check, complement and add 1: $0011 + 1 = (0100)_2 = 4$, so the magnitude is 4 and $R = -4$.
4. **Sum:** $P + Q + R = (-4) + (-3) + (-4) = -11$. A 6-bit 2's complement word holds -32 to $+31$, so -11 fits.
5. **6-bit 2's complement of -11:** $+11 = (001011)_2$. Complementing every bit gives 110100, and adding 1 gives $(110101)_2$. (Equivalently, $2^6 - 11 = 53 = (110101)_2$.)
6. **Check** with the weighted value: $-2^5 + 2^4 + 2^2 + 2^0 = -32 + 16 + 4 + 1 = -11$. The answer is option (A), 110101.

KEY IDEA

The same bit pattern means a different number in each representation. With MSB $= 1$: in signed magnitude the magnitude is the remaining bits, in 1's complement it is the complement of all the bits, and in 2's complement the MSB counts as -2^{n-1}. To write a negative number in 6-bit 2's complement, take $2^6 - |x|$, or complement $+|x|$ and add 1.

WATCH OUT FOR

A common slip is reading 1100 as -4 in 1's complement too. Its 1's complement value is -3, because the magnitude is $\overline{1100} = 0011$, not 100. Another slip is forming the 6-bit answer from the 4-bit pattern (for example by sign-extending 1100) instead of converting the sum -11. Some students also give 001011, which is $+11$, or forget the final $+1$ and pick the 1's complement pattern 110100.

Q.39 MCQ · 2 MARKS

Digital Electronics › Sequential

Q.No. 39 The state diagram of a sequence detector is shown below. State S_0 is the initial state of the sequence detector. If the output is 1, then

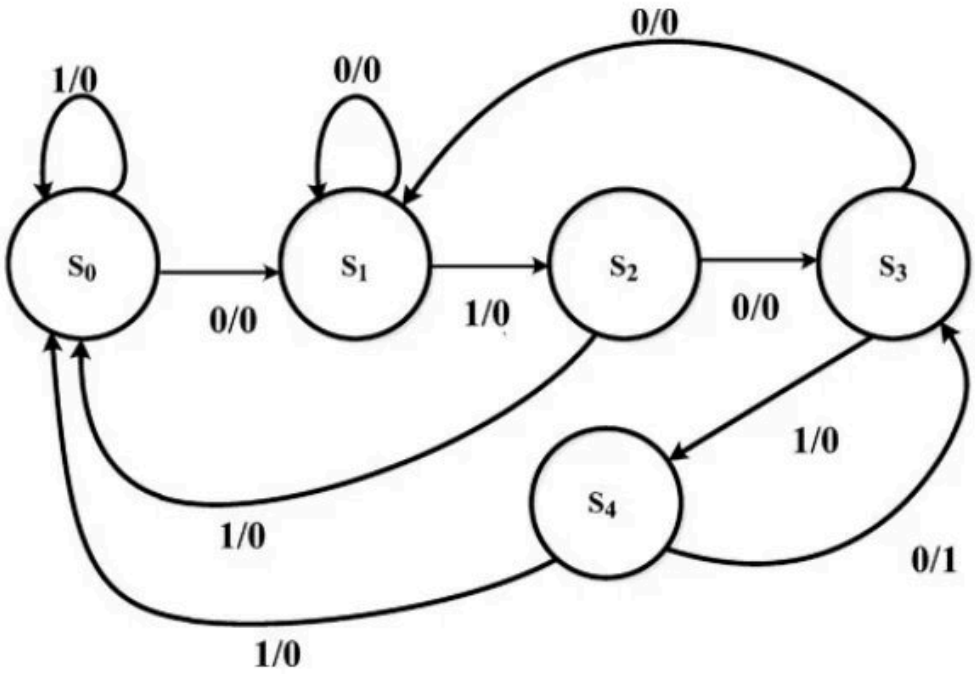

(A) the sequence 01010 is detected.

(B) the sequence 01011 is detected.

(C) the sequence 01110 is detected.

(D) the sequence 01001 is detected.

Official answer: **A**

SOLUTION

1. This is a **Mealy** machine. Each edge is labelled input/output, so the output depends on both the present state and the present input.
2. Find the only edge whose output is 1. It is $S_4 \xrightarrow{0/1} S_3$, so the output is 1 only when the input is 0 while the machine is in S_4.
3. Trace the route from S_0 into S_4: $S_0 \xrightarrow{0} S_1 \xrightarrow{1} S_2 \xrightarrow{0} S_3 \xrightarrow{1} S_4$. The machine can enter S_4 only from S_3 on a 1, and it can enter S_3 only on a 0 (from S_2 or from S_4), so the last four inputs before reaching S_4 are always 0101.
4. Add the final input 0 taken from S_4. The sequence that makes the output 1 is $0\,1\,0\,1\,0$, which is **01010**.
5. Check the other options by tracing each one from S_0. (B) 01011: $S_0 \to S_1 \to S_2 \to S_3 \to S_4$, then the input 1 takes $S_4 \xrightarrow{1/0} S_0$, so the output is 0.
6. (C) 01110: $S_0 \to S_1 \to S_2$, then the input 1 takes $S_2 \xrightarrow{1/0} S_0$, the next 1 keeps it in S_0 (self-loop), and the final 0 takes it to S_1. The output is 0 throughout.
7. (D) 01001: $S_0 \to S_1 \to S_2 \to S_3$, then the input 0 takes $S_3 \xrightarrow{0/0} S_1$ and the input 1 takes $S_1 \xrightarrow{1/0} S_2$. The output is 0 throughout.
8. After a detection the machine goes to S_3, the state that means "010 received". The last three bits of 01010 are 010, so this is an overlapping detector. For example, 0101010 gives output 1 at bit 5 and again

at bit 7.

KEY IDEA

In a Mealy diagram, find the one edge that outputs 1 ($S_4 \xrightarrow{0/1} S_3$). The detected sequence is the input path from S_0 into S_4 (0101) followed by that edge's input (0), which gives 01010.

WATCH OUT FOR

Reading the machine as Moore and taking the sequence that merely reaches S_4 (0101), then picking 01011 because it also passes through S_4. In a Mealy machine the 1 is produced on the transition $S_4 \xrightarrow{0/1} S_3$, so the last bit must be 0. A 1 from S_4 resets the machine to S_0 with output 0.

Q.40 MCQ · 2 MARKS

Control Systems › Root locus

The characteristic equation of a system is

$$s^3 + 3s^2 + (K+2)s + 3K = 0.$$

In the root locus plot for the given system, as K varies from 0 to ∞, the break-away or break-in point(s) lie within

(A) $(-1,\ 0)$.

(B) $(-2,\ -1)$.

(C) $(-3,\ -2)$.

(D) $(-\infty,\ -3)$.

Official answer: **A**

SOLUTION

1. Put the equation in root-locus form $1 + K\,G(s)H(s) = 0$ by collecting the K terms: $s^3 + 3s^2 + 2s + K(s+3) = 0$. This gives
$$G(s)H(s) = \frac{K(s+3)}{s(s+1)(s+2)}$$
The open-loop poles are at $0, -1, -2$ and the only zero is at -3.
2. Real-axis rule: a point on the real axis is on the locus (for $K > 0$) only if the number of real poles and zeros to its right is odd. That puts $(-1, 0)$ (one to the right) and $(-3, -2)$ (three to the right) on the locus. $(-2, -1)$ (two to the right) and $(-\infty, -3)$ (four to the right) are not on it.
3. What to expect: on $(-1, 0)$ two branches start at the poles 0 and -1 and move towards each other, so they must meet and break away somewhere inside $(-1, 0)$. On $(-3, -2)$ one branch runs from the pole at -2 to the zero at -3, so no break point is needed there. The break-point equation below confirms both.
4. Asymptotes: $P - Z = 3 - 1 = 2$, so the angles are $\pm 90^\circ$ and the centroid is $\sigma_a = \dfrac{(0 - 1 - 2) - (-3)}{2} = 0$. The two branches that break away from $(-1, 0)$ go off towards these vertical asymptotes.
5. Break-point condition $dK/ds = 0$ with $K = -\dfrac{s^3 + 3s^2 + 2s}{s+3}$:
$$(3s^2 + 6s + 2)(s+3) - (s^3 + 3s^2 + 2s) = 0$$
$$\Rightarrow\ 2s^3 + 12s^2 + 18s + 6 = 0\ \Rightarrow\ s^3 + 6s^2 + 9s + 3 = 0$$
6. Find where the roots lie by sign changes of $f(s) = s^3 + 6s^2 + 9s + 3$: $f(0) = 3$, $f(-1) = -1$, $f(-2) = 1$, $f(-3) = 3$, $f(-4) = -1$. So there is one root in $(-1, 0)$, one in $(-2, -1)$ and one in $(-4, -3)$. That accounts for all three roots of the cubic. (Numerically they are $s \approx -0.47,\ -1.65,\ -3.88$.)

7. Keep only the roots that lie on the locus. The roots near -1.65 and -3.88 fall in $(-2,-1)$ and $(-\infty,-3)$, which are not part of the locus. Check: $K=-\dfrac{s(s+1)(s+2)}{s+3}$ is negative at both, so they belong to the $K<0$ locus.
8. Check the root in $(-1,0)$: at $s\approx-0.47$,
$$K=\frac{0.47\times0.53\times1.53}{2.53}\approx0.15>0,$$
so it is a genuine break-away point. No valid root lies in $(-3,-2)$, which confirms there is no break point on that segment. So the only break-away or break-in point lies in $(-1,0)$, which is option (A).

KEY IDEA

First rewrite the characteristic equation as $1+K\,G(s)H(s)=0$, which gives $G(s)H(s)=\dfrac{K(s+3)}{s(s+1)(s+2)}$. The real-axis rule shows which segments are on the locus. Then solve $dK/ds=0$ and keep only the roots that sit on a locus segment and give $K>0$.

WATCH OUT FOR

Solving $dK/ds=0$ and accepting every root as a break point. The cubic $s^3+6s^2+9s+3=0$ has roots in $(-1,0)$, $(-2,-1)$ and $(-4,-3)$, so a student who skips the real-axis check (or the $K>0$ check) may pick (B) or (D). Another slip is to treat $3K$ as a constant and read the poles off $s^3+3s^2+(K+2)s$ without separating out the K terms.

Q.41 MCQ · 2 MARKS

Analog Electronics › Filters & waveforms

Q.No. 41 The components in the circuit given below are ideal. If $R=2$ kΩ and $C=1$ μF, the -3 dB cut-off frequency of the circuit in Hz is

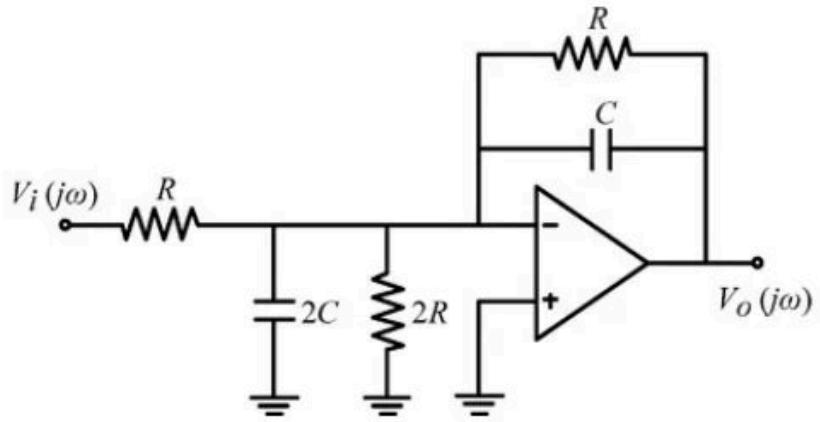

(A) 14.92
(B) 34.46
(C) 59.68
(D) 79.58

Official answer: **D**

SOLUTION

1. **Assumption:** ideal op-amp (infinite open-loop gain, infinite input impedance) with negative feedback through $R\parallel C$. Since $V_+=0$, the **virtual short** holds node X (the inverting input) at $V_-=0$ V, a virtual ground.
2. The shunt elements $2C$ and $2R$ are connected between node X (0 V) and ground (0 V). With no voltage across them, **neither carries any current**, so they have no effect on the transfer function.
3. **KCL at node X** (the ideal op-amp input draws no current): the input current $I=\dfrac{V_i-0}{R}=\dfrac{V_i}{R}$ flows entirely through the feedback impedance

$$Z_f = R \parallel \frac{1}{j\omega C} = \frac{R}{1 + j\omega RC}$$

4. Inverting-amplifier gain:

$$\frac{V_o}{V_i} = -\frac{Z_f}{R} = -\frac{1}{1 + j\omega RC}$$

This is a first-order low-pass response with DC gain magnitude 1.

5. The -3 dB point is where the magnitude falls to $\frac{1}{\sqrt{2}}$ of its DC value, i.e. $|1 + j\omega_c RC| = \sqrt{2}$, so $\omega_c RC = 1$:

$$f_c = \frac{1}{2\pi RC} = \frac{1}{2\pi(2 \times 10^3)(1 \times 10^{-6})} = \frac{1}{0.012566} \approx 79.58 \text{ Hz}$$

6. This matches option (D).

KEY IDEA

In an ideal inverting amplifier the inverting input is a virtual ground, so any element connected from that node to ground has zero volts across it and carries no current. Here the $2C$ and $2R$ shunt drop out. The gain is set only by Z_f/R with $Z_f = R \parallel C$, which gives a single pole at $\omega = 1/RC$.

WATCH OUT FOR

Treating $2C \parallel 2R$ as part of the input network, for example as a voltage divider with the series R or as an added pole at $1/(4RC)$, and so getting a lower cut-off frequency. Those elements sit between virtual ground and real ground and carry no current. A second slip is using $\omega_c = 1/RC$ directly as the answer in hertz (500) instead of dividing by 2π.

Q.42 MCQ · 2 MARKS

Communications › Analog modulation

Q.No. 42 For the modulated signal $x(t) = m(t)\cos(2\pi f_c t)$, the message signal $m(t) = 4\cos(1000\pi t)$ and the carrier frequency f_c is 1 MHz. The signal $x(t)$ is passed through a demodulator, as shown in the figure below. The output $y(t)$ of the demodulator is

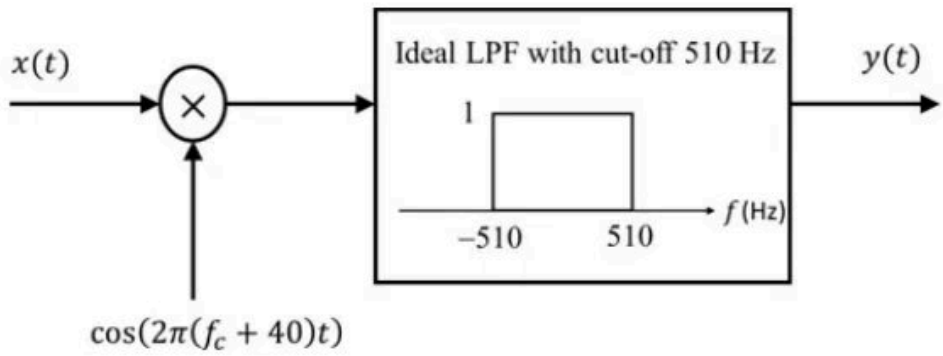

(A) $\cos(460\pi t)$.

(B) $\cos(920\pi t)$.

(C) $\cos(1000\pi t)$.

(D) $\cos(540\pi t)$.

Official answer: **B**

SOLUTION

1. The demodulator multiplies $x(t)$ by a local carrier that is 40 Hz away from f_c:

$$v(t) = 4\cos(1000\pi t)\cos(2\pi f_c t)\cos\big(2\pi(f_c + 40)t\big).$$

2. Apply $\cos A \cos B = \frac{1}{2}[\cos(A-B) + \cos(A+B)]$ to the two carrier factors:
$$\cos(2\pi f_c t)\cos(2\pi(f_c+40)t) = \tfrac{1}{2}\left[\cos(80\pi t) + \cos\left(2\pi(2f_c+40)t\right)\right].$$
3. The second term is centred near $2f_c \approx 2\ \text{MHz}$. It lies far above the 510 Hz cut-off of the ideal LPF, so it is removed, together with its sidebands at about $2\ \text{MHz} \pm 500\ \text{Hz}$. After the filter, only the low-frequency part of the product remains:
$$4\cos(1000\pi t)\cdot\tfrac{1}{2}\cos(80\pi t) = 2\cos(1000\pi t)\cos(80\pi t).$$
4. Expand the product of cosines:
$$2\cos(1000\pi t)\cos(80\pi t) = \cos(1080\pi t) + \cos(920\pi t).$$
5. The two terms have frequencies $\dfrac{1080\pi}{2\pi} = 540\ \text{Hz}$ and $\dfrac{920\pi}{2\pi} = 460\ \text{Hz}$.
6. The LPF has unit gain for $|f| \le 510\ \text{Hz}$ and zero gain beyond. The 460 Hz term lies inside the passband and is passed. The 540 Hz term lies outside and is blocked.
7. Hence $y(t) = \cos(920\pi t)$, which is option (B).

KEY IDEA

The local carrier is 40 Hz off, so the product gives $\frac{m(t)}{2}\cos(80\pi t)$, which splits the 500 Hz message into 460 Hz and 540 Hz. The 510 Hz LPF keeps only the 460 Hz term.

WATCH OUT FOR

Treating the 40 Hz offset as harmless and answering $\cos(1000\pi t)$ (option C). Another slip is to keep both 460 Hz and 540 Hz terms, or to pass the 540 Hz term because it is close to the cut-off. It is above 510 Hz, so it is blocked.

Q.43 MCQ · 2 MARKS

Electromagnetics › Antennas

Q.No. 43

For an infinitesimally small dipole in free space, the electric field E_θ in the far field is proportional to $(e^{-jkr}/r)\sin\theta$, where $k = 2\pi/\lambda$. A vertical infinitesimally small electric dipole ($\delta l \ll \lambda$) is placed at a distance h ($h > 0$) above an infinite ideal conducting plane, as shown in the figure. The minimum value of h, for which one of the maxima in the far field radiation pattern occurs at $\theta = 60°$, is

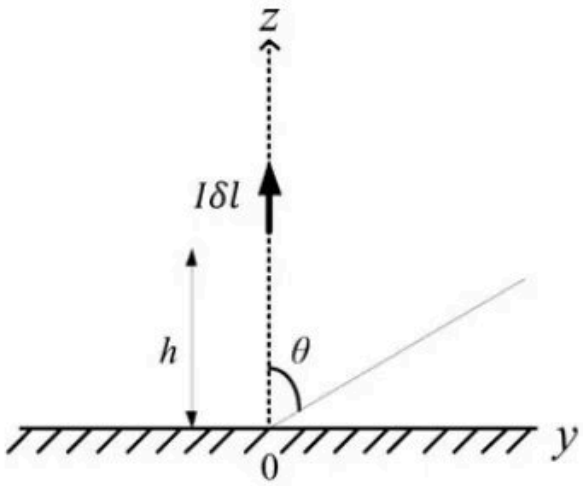

Infinite conducting plane

(A) λ

(B) 0.5λ

(C) 0.25λ

(D) 0.75λ

Official answer: **A**

SOLUTION

1. **Image theory.** A perfectly conducting plane can be replaced by the image of the source. For a **vertical** electric current element, the image points the **same way** (current $I\delta l$ along $+\hat{a}_z$) and sits at $z = -h$. The problem becomes a two-element array in free space, with the elements at $z = \pm h$ and in phase.
2. **Path difference.** In the far field, looking along direction θ, the real dipole is $h\cos\theta$ closer to the observer than the origin is, and the image is $h\cos\theta$ farther away:
$$E_\theta \propto \frac{e^{-jkr}}{r}\sin\theta\left[e^{jkh\cos\theta} + e^{-jkh\cos\theta}\right] = \frac{e^{-jkr}}{r}\,2\sin\theta\,\cos(kh\cos\theta)$$
3. **Pattern multiplication.** The pattern is the element factor $\sin\theta$ times the array factor $AF = \cos(kh\cos\theta)$. It holds only in the upper half-space, $0 \le \theta \le 90°$. The array factor has maxima, $|AF| = 1$, where
$$kh\cos\theta = n\pi, \quad n = 0, 1, 2, \ldots$$
4. $n = 0$ **does not help.** $n = 0$ gives $\cos\theta = 0$, so $\theta = 90°$ (along the plane). That lobe is there for every h. A maximum at $60°$ therefore needs $n \ge 1$, and the smallest h comes from $n = 1$.

5. **Solve for h.** With $\cos 60^\circ = \frac{1}{2}$ and $k = 2\pi/\lambda$:
$$\frac{2\pi}{\lambda}\, h \cdot \frac{1}{2} = \pi \;\Rightarrow\; h = \lambda$$
At $h = \lambda$ the array-factor maxima fall at $\cos\theta = 0, \frac{1}{2}, 1$, that is $\theta = 90^\circ, 60^\circ, 0^\circ$. The one at 0° is wiped out by the null of $\sin\theta$.
6. **Rule out the other options.** At $\theta = 60^\circ$, $kh\cos\theta = \pi h/\lambda$. For $h = 0.25\lambda$ this is $\pi/4$, and for $h = 0.75\lambda$ it is $3\pi/4$. Neither is a multiple of π. For $h = 0.5\lambda$ it is $\pi/2$, and $\cos(\pi/2) = 0$, so 60° is a **null**, not a maximum.
7. **Check on the full pattern.** The $\sin\theta$ element factor shifts the peak of $|\sin\theta\cos(kh\cos\theta)|$ slightly. For $h = \lambda$ the lobe between the nulls at 41.4° and 75.5° peaks at about 61°. Differentiating,
$$\frac{d}{d\theta}\left[\sin\theta\cos(kh\cos\theta)\right] = \cos\theta\cos(kh\cos\theta) + kh\sin^2\theta\,\sin(kh\cos\theta)$$
Setting this to zero at $\theta = 60^\circ$ gives $\frac{1}{2}\cos\frac{kh}{2} + \frac{3}{4}kh\sin\frac{kh}{2} = 0$, that is $\tan\left(\frac{kh}{2}\right) = -\frac{2}{3kh}$, so $h \approx 0.97\lambda$. That is not one of the options. The nearest option is still λ, and λ is exactly what the standard array-factor condition gives. Hence the answer is (A), $h = \lambda$.

KEY IDEA

Above a perfect conductor, a vertical current element's image points the same way (in phase), at $z = -h$. So the pattern is $\sin\theta\,\cos(kh\cos\theta)$. Array-factor maxima need $kh\cos\theta = n\pi$. The $n = 0$ lobe always sits at 90°, so the first maximum that can land at 60° is $n = 1$: $\frac{2\pi}{\lambda}h \cdot \frac{1}{2} = \pi$, which gives $h = \lambda$.

WATCH OUT FOR

Giving the image the wrong sign. That is the rule for a horizontal element, whose image is reversed. It gives $AF = \sin(kh\cos\theta)$ and the maxima condition $kh\cos\theta = (2n+1)\pi/2$, which leads to 0.5λ. At $h = 0.5\lambda$ the correct pattern actually has a null at 60°. A second mistake is using $n = 0$ and forgetting that it only gives the 90° lobe.

Q.44 NAT · 2 MARKS

Analog Electronics › Diode circuits

Q.No. 44 In the voltage regulator shown below, V_I is the unregulated input at 15 V. Assume $V_{BE} = 0.7$ V and the base current is negligible for both the BJTs. If the regulated output V_O is 9 V, the value of R_2 is _____ Ω.

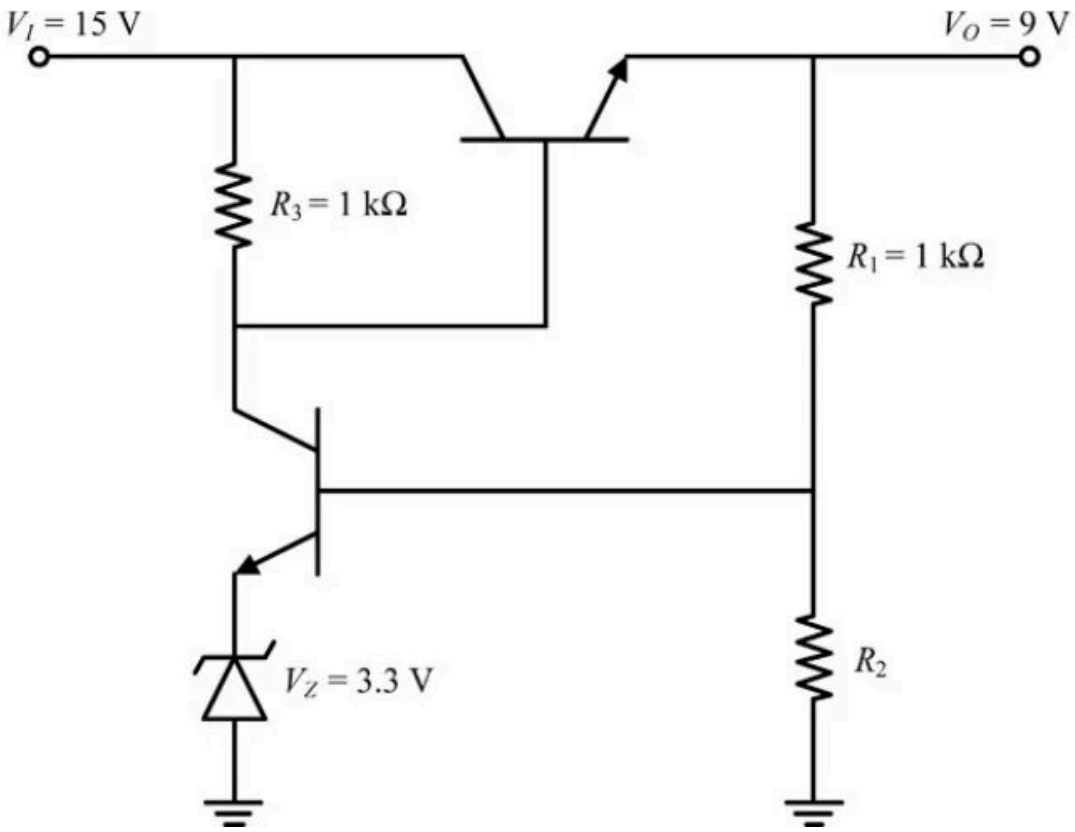

Official answer: **800**

SOLUTION

1. Assumptions stated in the question: both BJTs are in the active region with $V_{BE} = 0.7$ V, and both base currents are negligible. So the base of Q_2 draws no current from the R_1–R_2 junction.
2. The emitter of Q_2 sits on the cathode of the reverse-biased Zener, whose anode is grounded. So $V_{E2} = V_Z = 3.3$ V.
3. KVL across the base-emitter junction of Q_2:
$$V_{B2} = V_Z + V_{BE} = 3.3 + 0.7 = 4.0 \text{ V}$$
4. The base current of Q_2 is zero, so V_{B2} comes from an unloaded voltage divider across the output:
$$V_{B2} = V_O \frac{R_2}{R_1 + R_2}$$
5. Substitute $V_O = 9$ V and $R_1 = 1$ kΩ:
$$4 = 9 \cdot \frac{R_2}{1000 + R_2} \Rightarrow 4000 + 4R_2 = 9R_2 \Rightarrow R_2 = 800\ \Omega$$
6. Check that the operating point is consistent. $V_{B1} = V_O + V_{BE} = 9.7$ V, so R_3 carries $I = \frac{15 - 9.7}{1\text{ k}\Omega} = 5.3$ mA. The base current of Q_1 is negligible, so this whole current flows into the collector of Q_2 and down through the Zener. The Zener is therefore reverse-biased and conducting. Q_2 is active because $V_{CE2} = 9.7 - 3.3 = 6.4$ V, and Q_1 is active because $V_{CE1} = 15 - 9 = 6$ V. The assumptions hold.

KEY IDEA

In a series regulator with an error-amplifier transistor, the feedback loop settles where the sampled output at the divider tap equals the reference plus one base-emitter drop: $V_O \dfrac{R_2}{R_1+R_2} = V_Z + V_{BE}$. This is the same as $V_O = (V_Z + V_{BE})\left(1 + \dfrac{R_1}{R_2}\right)$. R_3 and V_I only set the bias current, not the output.

WATCH OUT FOR

Setting the divider tap equal to $V_Z = 3.3\ \text{V}$ and forgetting the V_{BE} of Q_2. That gives $R_2 = 3300/5.7 \approx 579\ \Omega$. Other mistakes are putting the V_{BE} of the pass transistor Q_1 into the divider equation, or trying to use $V_I = 15\ \text{V}$ and R_3 to find R_2. Neither of those affects the divider.

Q.45 NAT · 2 MARKS

Electromagnetics › Plane waves

The magnetic field of a uniform plane wave in vacuum is given by

$$\vec{H}(x, y, z, t) = (\hat{a}_x + 2\hat{a}_y + b\hat{a}_z)\cos(\omega t + 3x - y - z).$$

The value of b is _____.

Official answer: **1**

SOLUTION

1. Write the phase of a uniform plane wave as $\omega t - \boldsymbol{\beta} \cdot \mathbf{r}$, where $\boldsymbol{\beta}$ is the propagation (wave) vector and $\mathbf{r} = x\,\hat{a}_x + y\,\hat{a}_y + z\,\hat{a}_z$.
2. Compare this with the given phase: $\omega t + 3x - y - z = \omega t - (-3x + y + z)$, so $\boldsymbol{\beta} = -3\,\hat{a}_x + \hat{a}_y + \hat{a}_z$ (in rad/m). The wave travels along $\dfrac{-3\hat{a}_x + \hat{a}_y + \hat{a}_z}{\sqrt{11}}$.
3. In vacuum there are no sources, and Gauss's law for magnetism gives $\nabla \cdot \mathbf{H} = 0$. For a plane wave $\mathbf{H} = \mathbf{H}_0 \cos(\omega t - \boldsymbol{\beta} \cdot \mathbf{r})$ with a constant amplitude vector $\mathbf{H}_0$, this becomes $\nabla \cdot \mathbf{H} = (\boldsymbol{\beta} \cdot \mathbf{H}_0)\sin(\omega t - \boldsymbol{\beta} \cdot \mathbf{r}) = 0$ for every $\mathbf{r}$ and t. So $\boldsymbol{\beta} \cdot \mathbf{H}_0 = 0$, which means the field is transverse to the direction of propagation.
4. Apply the transversality condition with $\mathbf{H}_0 = \hat{a}_x + 2\hat{a}_y + b\hat{a}_z$:
$$(\hat{a}_x + 2\hat{a}_y + b\hat{a}_z) \cdot (-3\hat{a}_x + \hat{a}_y + \hat{a}_z) = -3 + 2 + b = 0$$
5. Solve: $b = 1$.

KEY IDEA

A uniform plane wave in a source-free medium is transverse. Because $\nabla \cdot \mathbf{H} = 0$, the amplitude vector of $\mathbf{H}$ must be perpendicular to the wave vector $\boldsymbol{\beta}$. You read $\boldsymbol{\beta}$ off the phase by writing it as $\omega t - \boldsymbol{\beta} \cdot \mathbf{r}$.

WATCH OUT FOR

Students often take the wave vector as $3\hat{a}_x - \hat{a}_y - \hat{a}_z$ straight from the phase. Writing $\omega t + 3x - y - z$ in the form $\omega t - \boldsymbol{\beta} \cdot \mathbf{r}$ gives $\boldsymbol{\beta} = -3\hat{a}_x + \hat{a}_y + \hat{a}_z$. For this question the sign does not change b, because flipping $\boldsymbol{\beta}$ still gives $\boldsymbol{\beta} \cdot \mathbf{H}_0 = 0$. It does reverse the direction of propagation, which matters in related questions. Another error is to pick the coefficients that make the dot product $+1$, or to set $\mathbf{H}$ parallel to $\boldsymbol{\beta}$, instead of perpendicular to it.

Q.46 NAT · 2 MARKS

Electromagnetics › Transmission lines

Q.No. 46 For a 2-port network consisting of an ideal lossless transformer, the parameter S_{21} **(rounded off to two decimal places)** for a reference impedance of 10 Ω, is _____.

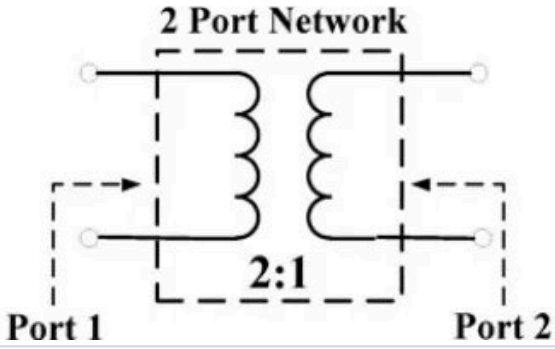

Official answer: **0.8**

SOLUTION

1. **Transformer relations.** For an ideal transformer with $N_1 : N_2 = n : 1$, where $n = 2$: $V_1 = nV_2$ and $I_1 = -I_2/n$, taking I_2 as flowing into port 2. A load Z on the secondary appears at the primary as $n^2 Z$.
2. **Set up S_{11} and S_{21}.** Terminate port 2 in the reference impedance $Z_0 = 10\ \Omega$, so no wave enters port 2 ($a_2 = 0$). The impedance seen at port 1 is then $Z_{in,1} = n^2 Z_0 = 4 \times 10 = 40\ \Omega$.
3. **Reflection coefficient at port 1**, using $\Gamma = \dfrac{Z_{in} - Z_0}{Z_{in} + Z_0}$:
$$S_{11} = \frac{40 - 10}{40 + 10} = 0.6$$
4. **Port-1 voltage from the incident wave.** The total voltage at port 1 is the incident wave plus the reflected wave: $V_1 = V_1^+ + V_1^- = V_1^+(1 + S_{11}) = 1.6\, V_1^+$.
5. **Voltage transfer through the transformer.** $V_2 = V_1/n = 1.6\, V_1^+/2 = 0.8\, V_1^+$. Port 2 is terminated in Z_0, so no wave travels into it ($V_2^+ = 0$) and the whole of V_2 is the outgoing wave: $V_2 = V_2^-$. (The drawing has no polarity dots. We take the usual reading, with both windings wound the same way, so V_2 is in phase with V_1. Reversing one winding would only flip the sign of S_{21}. Its magnitude stays the same.)
6. **Definition of S_{21}.** Both ports use the same Z_0, so the $\sqrt{Z_0}$ normalisation cancels:
$$S_{21} = \left.\frac{b_2}{a_1}\right|_{a_2=0} = \frac{V_2^-}{V_1^+} = 0.8$$
7. **General formula (check).** $S_{11} = \dfrac{n^2 - 1}{n^2 + 1}$ and $S_{21} = \dfrac{1 + S_{11}}{n} = \dfrac{2n}{1 + n^2}$. With $n = 2$: $S_{21} = \dfrac{4}{5} = 0.80$.
8. **Lossless check.** An ideal transformer absorbs no power, so with port 2 matched we need $|S_{11}|^2 + |S_{21}|^2 = 1$: $0.36 + 0.64 = 1$. The condition holds, so the result is consistent.

$$S_{21} = 0.80$$

KEY IDEA

Match port 2 with Z_0. The transformer then shows port 1 an impedance of $n^2 Z_0$, which gives $S_{11} = \dfrac{n^2 - 1}{n^2 + 1}$. The transformer steps the total port-1 voltage $V_1^+(1 + S_{11})$ down by n, and that becomes the outgoing wave at the matched port 2, so $S_{21} = \dfrac{1 + S_{11}}{n} = \dfrac{2n}{1 + n^2}$. The answer depends only on the turns ratio. Z_0 cancels out, so the given 10 Ω does not change the result.

WATCH OUT FOR

Taking S_{21} as the plain voltage ratio $V_2/V_1 = 1/n = 0.5$. That ignores the reflection at port 1: S_{21} is referred to the INCIDENT wave V_1^+, not to the total voltage $V_1 = V_1^+(1 + S_{11})$. Another slip is using n instead of n^2 for the impedance transformation, which gives $Z_{in} = 20\ \Omega$ and wrong values for both S_{11} and S_{21}. Checking $|S_{11}|^2 + |S_{21}|^2 = 1$ catches both errors.

Q.47 NAT · 2 MARKS

Communications › Analog modulation

Q.No. 47 $S_{PM}(t)$ and $S_{FM}(t)$ as defined below, are the phase modulated and the frequency modulated waveforms, respectively, corresponding to the message signal $m(t)$ shown in the figure.

$$S_{PM}(t) = \cos\left(1000\pi t + K_p m(t)\right)$$

$$\text{and } S_{FM}(t) = \cos\left(1000\pi t + K_f \int_{-\infty}^{t} m(\tau)d\tau\right)$$

where K_p is the phase deviation constant in radians/volt and K_f is the frequency deviation constant in radians/second/volt. If the highest instantaneous frequencies of $S_{PM}(t)$ and $S_{FM}(t)$ are same, then the value of the ratio $\dfrac{K_p}{K_f}$ is _____ seconds.

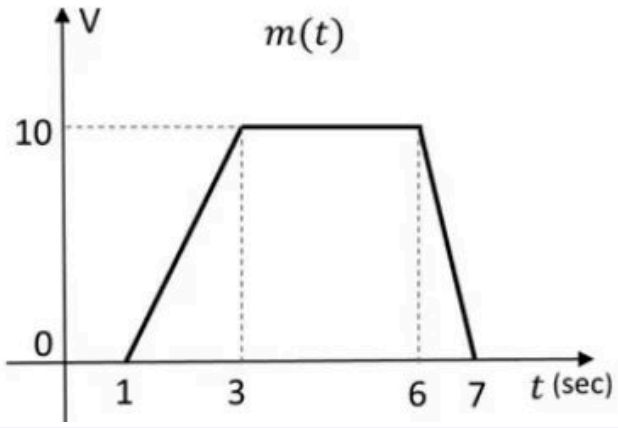

Official answer: **2**

SOLUTION

1. Read $m(t)$ from the figure: it is 0 for $t < 1$ s, rises linearly from 0 to 10 V over $1 \le t \le 3$, stays at 10 V for $3 \le t \le 6$, falls linearly from 10 to 0 V over $6 \le t \le 7$, and is 0 afterwards.
2. Slopes of $m(t)$: rising edge $\dfrac{dm}{dt} = \dfrac{10}{3 - 1} = 5$ V/s; flat part 0; falling edge $\dfrac{dm}{dt} = -\dfrac{10}{7 - 6} = -10$ V/s. The maximum value of $m(t)$ is 10 V.

3. The instantaneous angular frequency is the time derivative of the total phase. For PM the phase is $1000\pi t + K_p m(t)$, so
$$\omega_{PM}(t) = 1000\pi + K_p \frac{dm}{dt}.$$
4. For FM the phase is $1000\pi t + K_f \int_{-\infty}^{t} m(\tau)\, d\tau$, and the derivative of the integral is $m(t)$, so
$$\omega_{FM}(t) = 1000\pi + K_f\, m(t).$$
5. Taking $K_p > 0$ and $K_f > 0$ (they are deviation constants), the PM frequency is highest where dm/dt is largest, which is the rising edge:
$$\omega_{PM,\max} = 1000\pi + 5K_p.$$
The falling edge with $-10\ \mathrm{V/s}$ only lowers the frequency.
6. The FM frequency is highest where $m(t)$ is largest, which is $10\ \mathrm{V}$:
$$\omega_{FM,\max} = 1000\pi + 10K_f.$$
7. Equate the two highest frequencies: $1000\pi + 5K_p = 1000\pi + 10K_f \Rightarrow 5K_p = 10K_f$, so
$$\frac{K_p}{K_f} = 2\ \mathrm{s}.$$
The unit is consistent: K_p is in rad/V and K_f in rad/s/V, so the ratio is in seconds.

KEY IDEA

Instantaneous frequency is the derivative of the phase. For PM it follows the slope dm/dt, so its peak is on the steepest rising edge. For FM it follows $m(t)$ itself, so its peak is at the maximum of $m(t)$.

WATCH OUT FOR

Using the maximum value of $m(t)$ for the PM case, or the slope for the FM case, which swaps the roles. Another slip is picking the $10\ \mathrm{V/s}$ steepest slope, which is on the falling edge and lowers the PM frequency. The highest PM frequency uses the $5\ \mathrm{V/s}$ rising edge.

Q.48 NAT · 2 MARKS

Communications › Digital communication

In a digital communication system, a symbol S randomly chosen from the set $\{s_1, s_2, s_3, s_4\}$ is transmitted. It is given that $s_1 = -3$, $s_2 = -1$, $s_3 = +1$ and $s_4 = +2$. The received symbol is $Y = S + W$. W is a zero-mean unit-variance Gaussian random variable and is independent of S. P_i is the conditional probability of symbol error for the maximum likelihood (ML) decoding when the transmitted symbol $S = s_i$. The index i for which the conditional symbol error probability P_i is the highest is _____.

Official answer: **3**

SOLUTION

1. The noise is Gaussian with the same variance for every symbol, so ML decoding is minimum-distance decoding. The decision thresholds are the midpoints of adjacent symbols: -2 (between -3 and -1), 0 (between -1 and $+1$) and $+1.5$ (between $+1$ and $+2$).
2. Here $W \sim \mathcal{N}(0,1)$, so $P(W > a) = P(W < -a) = Q(a)$.
3. $s_1 = -3$: decoded correctly if $Y < -2$, that is $W < 1$. An error needs $W > 1$, so $P_1 = Q(1) \approx 0.159$.
4. $s_2 = -1$: decoded correctly if $-2 < Y < 0$, that is $-1 < W < 1$. An error occurs on either side, so $P_2 = 2Q(1) \approx 0.317$.
5. $s_3 = +1$: decoded correctly if $0 < Y < 1.5$, that is $-1 < W < 0.5$. An error needs $W < -1$ or $W > 0.5$, so $P_3 = Q(1) + Q(0.5) \approx 0.159 + 0.309 = 0.467$.
6. $s_4 = +2$: decoded correctly if $Y > 1.5$, that is $W > -0.5$. An error needs $W < -0.5$, so $P_4 = Q(0.5) \approx 0.309$.
7. Comparing, $P_3 \approx 0.467 > P_2 \approx 0.317 > P_4 \approx 0.309 > P_1 \approx 0.159$. Symbol s_3 has a decision region of width only 1.5 with a threshold on each side (at distances 1 and 0.5 from the symbol), so errors are

possible in both directions and it is the worst case.

8. Hence the index with the highest conditional symbol error probability is $i = 3$.

KEY IDEA

With equal-variance Gaussian noise, ML decoding is minimum-distance decoding. Put thresholds at the midpoints between adjacent symbols, then find each symbol's error probability from its distance to the thresholds with the Q function.

WATCH OUT FOR

Assuming the error probability is largest for the symbol with the nearest neighbour, or for an outer symbol. Outer symbols have only one threshold. Symbols s_2 and s_3 have thresholds on both sides, and s_3 has the closer pair, at distances 1 and 0.5. Also, a wrong placement of the threshold between $+1$ and $+2$ (it is at 1.5, not 1 or 2) changes the result.

Q.49 NAT · 2 MARKS

Control Systems › Bode & margins

A system with transfer function $G(s) = \dfrac{1}{(s+1)(s+a)}$, $a > 0$ is subjected to an input $5\cos 3t$. The steady state output of the system is $\dfrac{1}{\sqrt{10}}\cos(3t - 1.892)$. The value of a is _____.

Official answer: **3.95 to 4.05**

SOLUTION

1. **Sinusoidal steady state (frequency response):** the poles of $G(s)$ are at $s = -1$ and $s = -a$. Both lie in the left half-plane because $a > 0$, so the system is stable and a sinusoidal steady state exists. For the input $A\cos\omega t$ the steady-state output is $A\,|G(j\omega)|\cos\left(\omega t + \angle G(j\omega)\right)$. Here $A = 5$ and $\omega = 3\ \text{rad/s}$.
2. **Magnitude at $\omega = 3$:** $|G(j3)| = \dfrac{1}{|j3+1|\,|j3+a|} = \dfrac{1}{\sqrt{3^2+1}\sqrt{3^2+a^2}} = \dfrac{1}{\sqrt{10}\sqrt{9+a^2}}$.
3. **Match the output amplitudes:**
$$\frac{5}{\sqrt{10}\sqrt{9+a^2}} = \frac{1}{\sqrt{10}} \;\Rightarrow\; \sqrt{9+a^2} = 5 \;\Rightarrow\; a^2 = 16$$
4. **Use $a > 0$:** this gives $a = 4$.
5. **Check with the phase (in radians):** $\angle G(j3) = -\tan^{-1}(3) - \tan^{-1}\left(\dfrac{3}{4}\right) = -(1.2490 + 0.6435) = -1.8925\ \text{rad}$. This matches the printed -1.892, which confirms $a = 4$.

KEY IDEA

In the steady state, a stable LTI system driven by $A\cos\omega t$ gives $A|G(j\omega)|\cos(\omega t + \angle G(j\omega))$. Matching the output amplitude at $\omega = 3$ gives a directly. The printed phase of $-1.892\ \text{rad}$ then works as an independent check.

WATCH OUT FOR

Three slips are common. (1) Leaving out the input amplitude 5 and setting $|G(j3)| = 1/\sqrt{10}$. That gives $9 + a^2 = 1$, which has no real solution. (2) Treating -1.892 as degrees: it is in radians, so a phase check done in degrees fails. (3) Solving from the phase alone and getting $\tan^{-1}(3/a)$ wrong, when the amplitude equation gives the answer in one line.

Q.50 NAT · 2 MARKS

Digital Electronics › Sequential

Q.No. 50 For the components in the sequential circuit shown below, t_{pd} is the propagation delay, t_{setup} is the setup time, and t_{hold} is the hold time. The maximum clock frequency **(rounded off to the nearest integer)**, at which the given circuit can operate reliably, is _____ MHz.

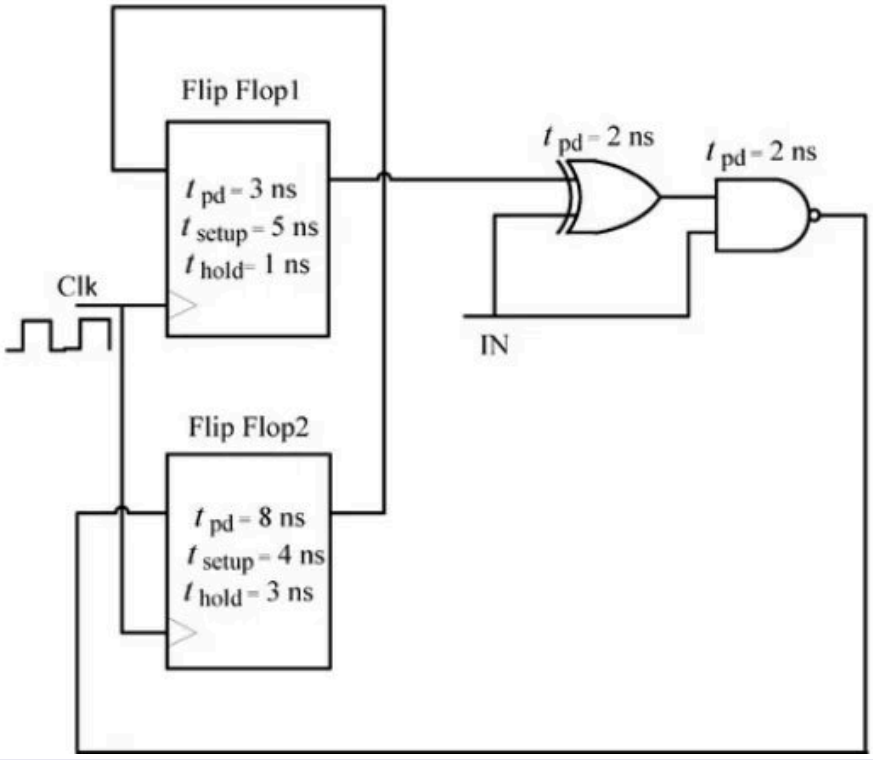

Official answer: **76 to 77**

SOLUTION

1. Read the circuit as two register-to-register paths. Both flip-flops are clocked by the same edge. The figure does not label the pins, so take the left-side inputs as D and the right-side outputs as Q. Path A runs from Q of FF1 through the XOR ($t_{pd} = 2$ ns) and the NAND ($t_{pd} = 2$ ns) to D of FF2. Path B runs from Q of FF2 straight back to D of FF1. The hop where this wire crosses FF1's output line is not a connection. IN is an external input with no timing given, so it does not set a flip-flop-to-flip-flop constraint.
2. Setup constraint for every path: $T_{clk} \geq t_{pd,\text{launch FF}} + t_{pd,\text{logic}} + t_{setup,\text{capture FF}}$.
3. Path A (FF1 launches, FF2 captures): $T_A = 3 + 2 + 2 + 4 = 11$ ns.
4. Path B (FF2 launches, FF1 captures, no gates in between): $T_B = 8 + 0 + 5 = 13$ ns.
5. The clock period has to cover the slowest path: $T_{min} = \max(11, 13) = 13$ ns.
6. Hold check: after a clock edge, the new data must not reach a flip-flop before that flip-flop's t_{hold} has passed. On Path A the data reaches FF2 after $3 + 2 + 2 = 7$ ns ≥ 3 ns. On Path B it reaches FF1 after 8 ns ≥ 1 ns. Neither path violates hold, so the hold times do not limit the frequency.
7. $$f_{max} = \frac{1}{T_{min}} = \frac{1}{13\ \text{ns}} \approx 76.92\ \text{MHz} \approx 77\ \text{MHz}$$

KEY IDEA

For each flip-flop-to-flip-flop path, the clock period must cover the launching flip-flop's t_{pd}, plus the gate delays on the path, plus the capturing flip-flop's t_{setup}. The largest of these sets T_{min}. Check hold separately: it cannot be fixed by slowing the clock. Here the path with no gates at all (FF2 to FF1) is the slowest, because FF2's 8 ns propagation delay and FF1's 5 ns setup time outweigh the two 2 ns gates on the other path.

WATCH OUT FOR

Only timing the obvious path through the gates (FF1 to XOR to NAND to FF2, 11 ns, which gives about 90.9 MHz) and missing the feedback wire from FF2 back to FF1. Another is reading the hop on FF1's output line as a junction, or pairing the wrong setup time with a path: the setup time always belongs to the flip-flop that CAPTURES the data. Adding hold times into the period is also wrong. Hold is a separate minimum-delay check.

Q.51 NAT · 2 MARKS

Engineering Mathematics › Calculus

Q.No. 51 For the solid S shown below, the value of $\iiint_S x\,dx\,dy\,dz$ **(rounded off to two decimal places)** is _____ .

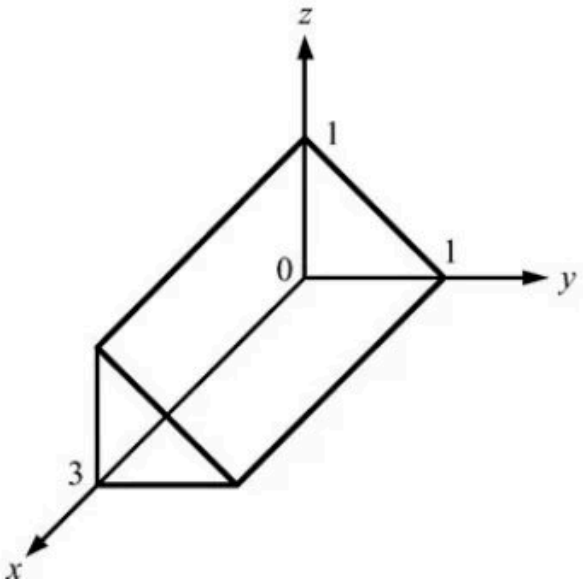

Official answer: **2.25**

SOLUTION

1. Read the region off the figure. At every fixed x the cross-section is the same right triangle in the yz-plane, with vertices $(y,z) = (0,0)$, $(1,0)$ and $(0,1)$, and the prism runs from $x = 0$ to $x = 3$. So $S = \{0 \le x \le 3,\ y \ge 0,\ z \ge 0,\ y + z \le 1\}$.
2. Set up the iterated integral with limits $0 \le z \le 1 - y$, $0 \le y \le 1$ and $0 \le x \le 3$:
$$I = \int_0^3 \int_0^1 \int_0^{1-y} x\,dz\,dy\,dx$$
3. The integrand depends only on x, and the y and z limits do not depend on x, so the integral separates (Fubini):
$$I = \left(\int_0^3 x\,dx\right)\left(\int_0^1 \int_0^{1-y} dz\,dy\right)$$
4. The y–z part is the area of the triangular cross-section: $\int_0^1 (1-y)\,dy = \left[y - \frac{y^2}{2}\right]_0^1 = \frac{1}{2}$.
5. The x part: $\int_0^3 x\,dx = \frac{x^2}{2}\Big|_0^3 = \frac{9}{2}$.

6. Multiply the two: $I = \frac{9}{2} \times \frac{1}{2} = \frac{9}{4} = 2.25$.
7. Check: $I = \bar{x}\, V$. The volume is $V = \frac{1}{2} \times 3 = \frac{3}{2}$, and because every cross-section is the same, the centroid sits halfway along the length, $\bar{x} = \frac{3}{2}$. That gives $\frac{3}{2} \cdot \frac{3}{2} = 2.25$.

KEY IDEA

The solid is a right prism: its cross-section at every x is the same triangle, of area $\frac{1}{2}$. So the triple integral of x splits into (area of the cross-section) $\times \int_0^3 x\, dx$. Put another way, it equals volume $\times$ the x-coordinate of the centroid: $\frac{3}{2} \times \frac{3}{2}$.

WATCH OUT FOR

Misreading the 3-D sketch. Some students take the triangle to lie in the xy- or xz-plane with the length 3 along y or z, which changes the integrand's weighting and gives the wrong value. Others treat the solid as a full box $[0,3] \times [0,1] \times [0,1]$ and get 4.5, because they miss the slanted face $y + z = 1$. A third mistake is to compute only the volume, 1.5, and forget the factor x in the integrand.

Q.52 NAT · 2 MARKS

Signals and Systems › Fourier transform

Q.No. 52

$X(\omega)$ is the Fourier transform of $x(t)$ shown below. The value of $\int_{-\infty}^{\infty} |X(\omega)|^2\, d\omega$ **(rounded off to two decimal places)** is _____ .

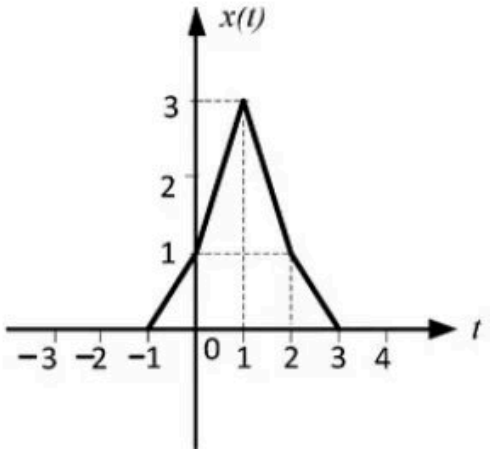

Official answer: **58.50 to 58.80**

SOLUTION

1. Parseval's theorem (with ω in rad/s): $\int_{-\infty}^{\infty} |X(\omega)|^2\, d\omega = 2\pi \int_{-\infty}^{\infty} |x(t)|^2\, dt = 2\pi E_x$. So we only need the energy of $x(t)$; $X(\omega)$ never has to be found.
2. Read the segments off the graph (corners at $(-1,0)$, $(0,1)$, $(1,3)$, $(2,1)$, $(3,0)$): $x(t) = t + 1$ on $[-1,0]$, $x(t) = 1 + 2t$ on $[0,1]$, $x(t) = 5 - 2t$ on $[1,2]$, $x(t) = 3 - t$ on $[2,3]$, and zero elsewhere. The signal is symmetric about $t = 1$ (for example $x(1-\tau) = x(1+\tau) = 3 - 2\tau$ for $0 \le \tau \le 1$), so the energy of the right half equals the energy of the left half.
3. Outer ramp, $[-1,0]$: $\int_{-1}^{0} (t+1)^2\, dt = \int_0^1 u^2\, du = \frac{1}{3}$.
4. Inner ramp, $[0,1]$: $\int_0^1 (1+2t)^2\, dt = \int_0^1 (1 + 4t + 4t^2)\, dt = 1 + 2 + \frac{4}{3} = \frac{13}{3}$.
5. By symmetry, $[1,2]$ gives $\frac{13}{3}$ and $[2,3]$ gives $\frac{1}{3}$. Total:

$$E_x = 2\left(\frac{1}{3} + \frac{13}{3}\right) = \frac{28}{3} \approx 9.333$$

6. Apply Parseval's theorem:

$$\int_{-\infty}^{\infty} |X(\omega)|^2 \, d\omega = 2\pi \cdot \frac{28}{3} = \frac{56\pi}{3} \approx 58.64$$

KEY IDEA

Parseval's theorem turns an integral over frequency into an energy integral over time: $\int |X(\omega)|^2 \, d\omega = 2\pi \int |x(t)|^2 \, dt$ when ω is in rad/s. For a piecewise-linear signal, split it at its corners, square each linear piece and integrate. Use symmetry to halve the work.

WATCH OUT FOR

Leaving out the factor 2π gives $28/3 \approx 9.33$. That factor belongs to the ω (rad/s) form of Parseval's theorem; only the f (Hz) form has no 2π. Two other slips are common: squaring the triangle's area instead of integrating $x^2(t)$, and misreading the change of slope at $(0, 1)$ and $(2, 1)$, which treats the signal as a single triangle from -1 to 3 with peak 3 and gives $E_x = 12$.

Q.53 NAT · 2 MARKS

Signals and Systems › z-transform

The transfer function of a stable discrete-time LTI system is $H(z) = \dfrac{K(z-\alpha)}{z+0.5}$, where K and α are real numbers. The value of α (rounded off to one decimal place) with $|\alpha| > 1$, for which the magnitude response of the system is constant over all frequencies, is _____.

Official answer: **-2**

SOLUTION

1. Magnitude response means $|H(e^{j\omega})|$, i.e. $H(z)$ evaluated on the unit circle $z = e^{j\omega}$. If it is constant for every ω, $H(z)$ is an all-pass system.
2. All-pass rule for a first-order real section: the zero must sit at the reciprocal of the pole, $z_0 = 1/p$. For real p,

   $$|e^{j\omega} - \tfrac{1}{p}| = \frac{1}{|p|}\,|p\,e^{j\omega} - 1| = \frac{1}{|p|}\,|p - e^{-j\omega}| = \frac{1}{|p|}\,|e^{j\omega} - p|,$$

   where the last step uses the fact that a complex number and its conjugate have the same magnitude. So $|e^{j\omega} - z_0| \,/\, |e^{j\omega} - p| = 1/|p|$ at every point on the unit circle.
3. Here the pole is $p = -0.5$. It lies inside the unit circle, so the system is stable, as the question says. The zero is at $z = \alpha$, so the rule gives $\alpha = \dfrac{1}{-0.5} = -2$, and $|\alpha| = 2 > 1$ as required.
4. (The only other way to get a constant magnitude is $\alpha = -0.5$: the zero cancels the pole and $H(z) = K$. The condition $|\alpha| > 1$ rules that out.)
5. Check on the unit circle:

   $$|H(e^{j\omega})|^2 = K^2\,\frac{|e^{j\omega} + 2|^2}{|e^{j\omega} + 0.5|^2} = K^2\,\frac{(2+\cos\omega)^2 + \sin^2\omega}{(0.5+\cos\omega)^2 + \sin^2\omega} = K^2\,\frac{5 + 4\cos\omega}{1.25 + \cos\omega} = 4K^2$$

6. So $|H(e^{j\omega})| = 2|K|$ at every frequency, which confirms $\alpha = -2.0$.

KEY IDEA

A first-order section has constant magnitude response (all-pass) when its zero is the reciprocal of its pole, $z_0 = 1/p$. On the unit circle, $|e^{j\omega} - 1/p| = |e^{j\omega} - p|/|p|$ for real p, so the ratio of the two distances does not depend on ω. Pole at -0.5 gives zero at -2.

WATCH OUT FOR

Answering $\alpha = -0.5$ (pole-zero cancellation). That does give a constant magnitude, but it breaks the condition $|\alpha| > 1$. Another common slip is to take the reciprocal as $+2$, putting the zero at the mirror image through the origin instead of at $1/p$. That gives $|H|^2 \propto (5 - 4\cos\omega)/(1.25 + \cos\omega)$, which changes with frequency.

Q.54 NAT · 2 MARKS

Engineering Mathematics › Probability & statistics

X is a random variable with uniform probability density function in the interval $[-2, 10]$. For $Y = 2X - 6$, the conditional probability $P(Y \leq 7 \mid X \geq 5)$ (rounded off to three decimal places) is _____.

Official answer: **0.299 to 0.301**

SOLUTION

1. Write the PDF of X. For a uniform distribution on $[-2, 10]$, $f_X(x) = \dfrac{1}{10 - (-2)} = \dfrac{1}{12}$ for $-2 \leq x \leq 10$, and 0 everywhere else.
2. Rewrite the event on Y as an event on X. Since $Y = 2X - 6$ is strictly increasing, $Y \leq 7 \iff 2X - 6 \leq 7 \iff 2X \leq 13 \iff X \leq 6.5$.
3. Use the definition of conditional probability:
$$P(Y \leq 7 \mid X \geq 5) = \frac{P(X \leq 6.5 \cap X \geq 5)}{P(X \geq 5)} = \frac{P(5 \leq X \leq 6.5)}{P(5 \leq X \leq 10)}$$
(the upper limit is 10 because X never exceeds 10).
4. For a uniform variable, the probability of a sub-interval is its length times the density $\dfrac{1}{12}$: $P(5 \leq X \leq 6.5) = \dfrac{1.5}{12}$ and $P(5 \leq X \leq 10) = \dfrac{5}{12}$.
5. Divide:
$$P(Y \leq 7 \mid X \geq 5) = \frac{1.5/12}{5/12} = \frac{1.5}{5} = 0.300$$
6. Check: once $X \geq 5$ is known, X is uniform on $[5, 10]$ (length 5). The part of that interval with $X \leq 6.5$ has length 1.5, so the probability is $1.5/5 = 0.3$.

KEY IDEA

Turn the condition on Y into a condition on X using the increasing map $Y = 2X - 6$, which gives $X \leq 6.5$. Conditioning a uniform variable on a sub-interval leaves it uniform on that sub-interval, so the conditional probability is just a ratio of lengths: $1.5/5$.

WATCH OUT FOR

Dividing by the full length 12 and not by the length of the conditioning interval $[5, 10]$, which gives $1.5/12 = 0.125$. Other slips: solving $2X - 6 \leq 7$ as $X \leq 0.5$ or $X \leq 6$; forgetting to cap $X \geq 5$ at the support limit 10; or computing $P(Y \leq 7)$ over the whole range, $8.5/12 \approx 0.708$, and never applying the condition.

Q.55 NAT · 2 MARKS

Control Systems › Time response

Q.No. 55 Consider the following closed loop control system

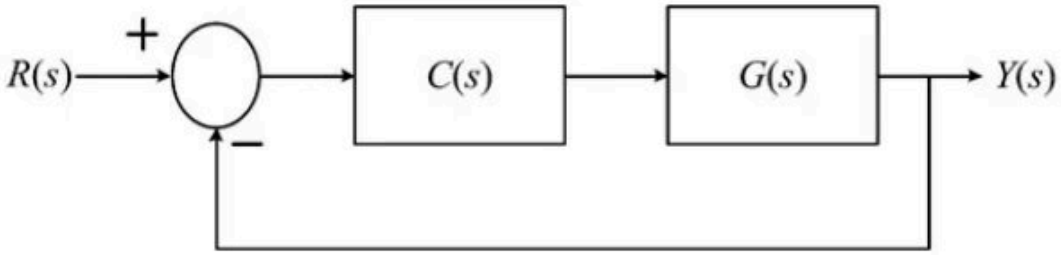

where $G(s)=\dfrac{1}{s(s+1)}$ and $C(s)=K\dfrac{s+1}{s+3}$. If the steady state error for a unit ramp input is 0.1, then the value of K is _____.

Official answer: **30**

SOLUTION

1. Forward path. The feedback is unity (the output returns to the summer directly, with no block), so the open-loop transfer function is
$$C(s)G(s)=K\frac{s+1}{s+3}\cdot\frac{1}{s(s+1)}=\frac{K}{s(s+3)}$$
The controller zero at $s=-1$ cancels the plant pole at $s=-1$.
2. Stability comes first, because the final-value theorem only holds for a stable closed loop. Without the cancellation, the characteristic equation $1+C(s)G(s)=0$ is
$$s(s+1)(s+3)+K(s+1)=(s+1)\left(s^2+3s+K\right)=0$$
The cancelled mode at $s=-1$ is in the left half-plane, and s^2+3s+K has both roots in the left half-plane for every $K>0$. So the loop is stable for $K>0$, and $K=30$ satisfies this.
3. System type. $C(s)G(s)$ has one pole at the origin, so the loop is type 1. A unit ramp therefore leaves a finite steady-state error $e_{ss}=\dfrac{1}{K_v}$.
4. Velocity error constant:
$$K_v=\lim_{s\to0}s\,C(s)G(s)=\lim_{s\to0}\frac{K}{s+3}=\frac{K}{3}$$
5. Cross-check straight from the error signal:
$$E(s)=\frac{R(s)}{1+C(s)G(s)}=\frac{1}{s^2}\cdot\frac{s(s+3)}{s^2+3s+K},\qquad e_{ss}=\lim_{s\to0}sE(s)=\lim_{s\to0}\frac{s+3}{s^2+3s+K}=\frac{3}{K}$$
This agrees with $1/K_v$.
6. Apply the given condition:
$$e_{ss}=\frac{3}{K}=0.1\ \Rightarrow\ K=30$$

KEY IDEA

With unity feedback, the ramp error of a type-1 loop is $e_{ss} = 1/K_v$, where $K_v = \lim_{s\to 0} sC(s)G(s)$. The controller zero cancels the plant pole at $s = -1$, which leaves $C(s)G(s) = K/(s(s+3))$. That gives $K_v = K/3$, so $e_{ss} = 3/K$. The cancelled mode sits at $s = -1$, in the left half-plane, so it cannot make the loop unstable.

WATCH OUT FOR

A common slip is to ignore the controller's pole at $s = -3$ and take $K_v = K$, which gives $K = 10$. Another is to use the $(s+1)$ factor after cancelling it, for example writing $K_v = K/(1 \cdot 3)$ with the wrong factor or keeping $s+1$ in the denominator, which gives a different value. Some students also apply the final-value theorem without checking stability first. Here the loop is stable for every $K > 0$, but you should state that check before using the theorem.

FROM IAE ACADEMY

Preparing for GATE EC?

IAE Academy teaches GATE EC in Ballygunge, Kolkata, and online. Counselling is free: ask us about batches, fees or your preparation.

FREE COUNSELLING

Chat on WhatsApp

Call +91 84204 36524

Open every day, 10:30 am to 7:30 pm.

Scan to chat on WhatsApp

THE GATE EC COURSE

Classroom batches in Ballygunge and online batches. Fees and details are on the course page.

Scan: course page

See the course

FREE ON IAEACADEMY.IN

More GATE EC papers, question by question with the official answers, and free notes by subject.

Scan: more papers

More solved papers

Found this useful? Send it to a friend preparing for GATE.

Send to a friend on WhatsApp

IAE Academy free study material. The questions are those of the GATE EC 2020 question paper, organised by IIT Delhi; the answers are from its official answer key. Prepared and published by IAE Academy, Kolkata. Free to read and free to share, unaltered and with attribution. Not affiliated with, endorsed by or produced by IIT Delhi or the GATE committee.

IAE ACADEMY INSTITUTE FOR ENGINEERS

GATE coaching in Kolkata since 2012 · EC, EE, IN, CS and IT, DA, BT and CE · in the classroom and online

227A Rash Behari Ave, Ballygunge, Kolkata 700019

+91 84204 36524 · iaeacademy.in · Updated 27 October 2026

Get directions