IAE ACADEMY INSTITUTE FOR ENGINEERS

GATE EC · 2018

IAE Academy free study material · Updated 27 October 2026

# GATE EC 2018 Solved Paper

INSIDE

- All 65 questions, in the order of the paper
- The official answer to every question
- Step-by-step worked solutions
- The answer key on one page

Question paper and official answer key: IIT Guwahati

Online, with the questions linked to their topic notes: **iaeacademy.in/study/papers/ec-2018**


FREE COUNSELLING

**Preparing for GATE EC? Talk to IAE Academy.**

Or call **+91 84204 36524**

Every day, 10:30 am to 7:30 pm

Chat on WhatsApp





Free. Not for sale. Pass it on.

## About this paper

**65 questions, 100 marks.** Question types: 34 MCQ · 31 NAT.

**Official answer key:** IIT Guwahati

This paper numbers General Aptitude GA Q.1 to GA Q.10 and the subject questions Q.1 to Q.55: 65 questions in all.

We placed each question under a subject and topic ourselves; the exam paper does not label them.

This paper online, with the questions linked to their topic notes:
iaeacademy.in/study/papers/ec-2018

## Answer key

| Q | TYPE | MARKS | ANSWER |
|---|---|---|---|
| GA Q.1 | MCQ | 1 | **B** |
| GA Q.2 | MCQ | 1 | **A** |
| GA Q.3 | MCQ | 1 | **B** |
| GA Q.4 | MCQ | 1 | **D** |
| GA Q.5 | MCQ | 1 | **B** |
| GA Q.6 | MCQ | 2 | **B** |
| GA Q.7 | MCQ | 2 | **B** |
| GA Q.8 | MCQ | 2 | **C** |
| GA Q.9 | MCQ | 2 | **C** |
| GA Q.10 | MCQ | 2 | **D** |
| Q.1 | MCQ | 1 | **C** |
| Q.2 | MCQ | 1 | **C** |
| Q.3 | MCQ | 1 | **D** |
| Q.4 | MCQ | 1 | **C** |
| Q.5 | MCQ | 1 | **D** |
| Q.6 | MCQ | 1 | **B** |
| Q.7 | MCQ | 1 | **D** |
| Q.8 | MCQ | 1 | **D** |
| Q.9 | MCQ | 1 | **C** |
| Q.10 | MCQ | 1 | **C** |
| Q.11 | MCQ | 1 | **C** |
| Q.12 | MCQ | 1 | **D** |
| Q.13 | MCQ | 1 | **B** |
| Q.14 | MCQ | 1 | **C** |
| Q.15 | NAT | 1 | **0.12 to 0.13** |
| Q.16 | NAT | 1 | **16** |
| Q.17 | NAT | 1 | **0.12 to 0.14** |
| Q.18 | NAT | 1 | **0.40 to 0.43** |
| Q.19 | NAT | 1 | **5** |
| Q.20 | NAT | 1 | **0.47 to 0.51** |
| Q.21 | NAT | 1 | **0.001** |
| Q.22 | NAT | 1 | **2** |
| Q.23 | NAT | 1 | **0.25** |
| Q.24 | NAT | 1 | **-0.01 to 0.01** |
| Q.25 | NAT | 1 | **4.3 to 5.3** |
| Q.26 | MCQ | 2 | **B** |
| Q.27 | MCQ | 2 | **D** |
| Q.28 | MCQ | 2 | **B** |
| Q.29 | MCQ | 2 | **A** |
| Q.30 | MCQ | 2 | **B** |
| Q.31 | MCQ | 2 | **C** |
| Q.32 | MCQ | 2 | **A** |
| Q.33 | MCQ | 2 | **B** |
| Q.34 | MCQ | 2 | **A** |
| Q.35 | MCQ | 2 | **C** |
| Q.36 | NAT | 2 | **0.284 to 0.348** |
| Q.37 | NAT | 2 | **6.2 to 6.6** |
| Q.38 | NAT | 2 | **0.4 to 0.6** |
| Q.39 | NAT | 2 | **8** |
| Q.40 | NAT | 2 | **-0.5** |
| Q.41 | NAT | 2 | **14 to 17** |
| Q.42 | NAT | 2 | **0.1** |
| Q.43 | NAT | 2 | **0.41 to 0.435** |
| Q.44 | NAT | 2 | **0.59 to 0.63** |
| Q.45 | NAT | 2 | **0.11 to 0.13** |
| Q.46 | NAT | 2 | **0.82 to 0.86** |
| Q.47 | NAT | 2 | **8** |
| Q.48 | NAT | 2 | **0.7 to 0.8** |
| Q.49 | NAT | 2 | **1.9 to 2.1** |
| Q.50 | NAT | 2 | **-0.23 to -0.19** |
| Q.51 | NAT | 2 | **2** |
| Q.52 | NAT | 2 | **4.4 to 4.6** |
| Q.53 | NAT | 2 | **7.9 to 8.1** |
| Q.54 | NAT | 2 | **13** |
| Q.55 | NAT | 2 | **2.90 to 3.10** |

# General Aptitude GA Q.1 to Q.10

## GA Q.1 MCQ · 1 MARK

General Aptitude › Grammar & vocabulary

"By giving him the last _____ of the cake, you will ensure lasting _____ in our house today."

The words that best fill the blanks in the above sentence are

**(A)** peas, piece

**(B)** piece, peace

**(C)** peace, piece

**(D)** peace, peas

Official answer: **B**

**SOLUTION**

1. Every option is built from homophones. **piece**, **peace** and **peas** sound almost the same but mean different things, so choose each word by its meaning in the sentence.
2. **piece** (noun) is a portion or part of something, as in "a piece of cake". **peace** (noun) is calm and harmony, the absence of quarrels. **peas** (plural noun) are the small green seeds of a vegetable.
3. First blank: "the last _____ of the cake" needs a portion of the cake, so the word is **piece**. "The last peace of the cake" and "the last peas of the cake" make no sense. Only option (B) begins with *piece*, so (A), (C) and (D) are ruled out.
4. Second blank, as a check: "ensure lasting _____ in our house" needs a state of harmony that can last, so the word is **peace**. "Lasting peace" is a standard collocation, while "lasting piece in our house" means nothing here. Option (B) has *peace* second, so it passes this check as well.
5. The pair is **piece, peace**, which is option (B). The completed sentence reads: "By giving him the last piece of the cake, you will ensure lasting peace in our house today."

**KEY IDEA**

Homophones: words that sound alike (piece / peace / peas) are told apart only by meaning. Fill each blank from its context: a "piece" of cake, and lasting "peace" in a house. Checking the first blank on its own already leaves only one option.

**WATCH OUT FOR**

Choosing (C), "peace, piece", by swapping the two homophones: the words look and sound alike, so a hurried reader matches them to the wrong blanks. Also picking (A) or (D) because "peas" sounds right when read aloud; peas is a vegetable and fits neither blank.

## GA Q.2 MCQ · 1 MARK

General Aptitude › Grammar & vocabulary

“Even though there is a vast scope for its _____, tourism has remained a/an _____ area.”

The words that best fill the blanks in the above sentence are

**(A)** improvement, neglected

**(B)** rejection, approved

**(C)** fame, glum

**(D)** interest, disinterested

Official answer: **A**

**SOLUTION**

1. Signal word: "Even though" introduces a concession, so the second clause must go against what the first clause leads you to expect. A "vast scope" means big potential, so the second blank has to say that tourism has not lived up to that potential.

2. Collocation: "scope for X" means room or potential for X, and X is normally something that could usefully happen, such as development, growth or improvement. So the first blank needs a noun naming something good that could happen to tourism.
3. (A) improvement, neglected: "vast scope for its improvement" is natural English, and "has remained a neglected area" goes against that potential. The room to improve exists, but no one has acted on it, which is exactly the contrast "Even though" needs. "a/an" becomes "a" before "neglected". Both blanks work.
4. (B) rejection, approved: the two words are opposites, so the sentence has the shape of a contrast, but the content does not hold up. "Vast scope for its rejection" treats tourism as a proposal waiting to be turned down, which is not a sensible potential to talk about, and "an approved area" is not a natural way to describe a sector. B is rejected because the words do not fit the sentence, not because the contrast is missing.
5. (C) fame, glum: "glum" means gloomy or dejected. It describes a person's mood and cannot describe an area of activity such as tourism. "Scope for its fame" is also unidiomatic. C fails.
6. (D) interest, disinterested: "disinterested" strictly means impartial or unbiased ("lacking interest" is "uninterested"). Either way, the word describes a person's attitude, not an area. "Scope for its interest" is also unidiomatic. D fails on both blanks.
7. Only (A) gets a natural collocation in the first blank and a real contrast in the second, so the answer is (A).

**KEY IDEA**

"Even though" signals a concession: the second clause must go against what the first leads you to expect. "Scope for X" means potential for something beneficial (improvement), and a potential nobody has acted on is "neglected". Also check that each word fits its noun: an area can be neglected, but it cannot be glum or disinterested, because those words describe people.

**WATCH OUT FOR**

Picking (B) because "rejection" and "approved" are opposites and seem to fit the "Even though" contrast. Opposites alone are not enough: each word must also make sense in its own blank, and "scope for its rejection" and "an approved area" do not. A second trap is (D): matching "interest" with "disinterested" looks neat, but "disinterested" means impartial and describes people, not areas.

## GA Q.3 MCQ · 1 MARK

General Aptitude › Numerical

If the number 715■423 is divisible by 3 (■ denotes the missing digit in the thousandths place), then the smallest whole number in the place of ■ is _____.

**(A)** 0

**(B)** 2

**(C)** 5

**(D)** 6

Official answer: **B**

**SOLUTION**

1. Divisibility rule for 3: a whole number is divisible by 3 exactly when the sum of its digits is divisible by 3. Where the missing digit sits in the number does not matter for this test. (The paper says "thousandths"; the digit is actually in the thousands place of 715■423.)
2. Add the known digits: $7 + 1 + 5 + 4 + 2 + 3 = 22$.
3. Call the missing digit $x$, where $x$ is one of $0, 1, \ldots, 9$. The digit sum is $22 + x$, so $22 + x$ must be a multiple of 3.

4. $22 = 3 \times 7 + 1$, so 22 leaves remainder 1 when divided by 3. For $22 + x$ to leave remainder 0, $x$ must leave remainder 2, so $x \in \{2, 5, 8\}$.
5. The smallest of these is $x = 2$. Check: the digit sum becomes $24 = 3 \times 8$, so $7152423$ is divisible by 3. (Directly: $7152423 = 3 \times 2384141$.)
6. Check the other options. (A) $x = 0$: the digit sum is 22, not a multiple of 3, so this fails. (C) $x = 5$: the digit sum is 27, which works, but $5 > 2$, so it is not the smallest. (D) $x = 6$: the digit sum is 28, not a multiple of 3, so this fails.
7. The smallest whole number that can go in place of ■ is 2, which is option (B).

**KEY IDEA**

A number is divisible by 3 exactly when its digit sum is. The known digits add to 22, which leaves remainder 1 when divided by 3, so the missing digit must leave remainder 2 (2, 5 or 8). The smallest of these is 2.

**WATCH OUT FOR**

Using the divisibility rule for 9 instead of 3. The next multiple of 9 after 22 is 27, which gives 5, a trap set as option (C). Another slip is choosing (A) 0 just because it is the smallest whole number, without checking it: a digit sum of 22 is not divisible by 3.

## GA Q.4 MCQ · 1 MARK

General Aptitude › Numerical

What is the value of $1 + \frac{1}{4} + \frac{1}{16} + \frac{1}{64} + \frac{1}{256} + \cdots$?

**(A)** $2$

**(B)** $\frac{7}{4}$

**(C)** $\frac{3}{2}$

**(D)** $\frac{4}{3}$

Official answer: **D**

**SOLUTION**

1. Each term is $\frac{1}{4}$ of the one before it: $\frac{1}{4} \div 1 = \frac{1}{4}$, $\frac{1}{16} \div \frac{1}{4} = \frac{1}{4}$, $\frac{1}{64} \div \frac{1}{16} = \frac{1}{4}$, and so on. So this is a geometric series with first term $a = 1$ and common ratio $r = \frac{1}{4}$.
2. An infinite geometric series converges when $|r| < 1$, and its sum is then $S_\infty = \dfrac{a}{1 - r}$. Here $|r| = \frac{1}{4} < 1$, so the sum exists.
3. $$S_\infty = \frac{1}{1 - \frac{1}{4}} = \frac{1}{\frac{3}{4}} = \frac{4}{3}$$
4. Check with partial sums: $1 + 0.25 + 0.0625 + 0.015625 + 0.00390625 = 1.33203125$, which is closing in on $1.333\ldots = \frac{4}{3}$ and stays well below $\frac{3}{2} = 1.5$.
5. So the value is $\frac{4}{3}$, which is option (D).

**KEY IDEA**

If every term is a fixed multiple $r$ of the one before it and $|r| < 1$, the infinite geometric series adds up to $\dfrac{a}{1 - r}$, where $a$ is the first term. Find $a$ and $r$ first, then use the formula.

**WATCH OUT FOR**

Using the ratio $\frac{1}{2}$ because the series looks like the familiar $1 + \frac{1}{2} + \frac{1}{4} + \cdots = 2$. That gives option (A). Another slip is to leave out the leading 1 and add only $\frac{1}{4} + \frac{1}{16} + \cdots = \frac{1}{3}$. Adding the first few terms also shows the answer is below $1.34$, which rules out (A), (B) and (C).

## GA Q.5 MCQ · 1 MARK

General Aptitude › Geometry

A 1.5 m tall person is standing at a distance of 3 m from a lamp post. The light from the lamp at the top of the post casts her shadow. The length of the shadow is twice her height. What is the height of the lamp post in meters?

**(A)** 1.5

**(B)** 3

**(C)** 4.5

**(D)** 6

Official answer: **B**

**SOLUTION**

1. Length of the shadow = twice her height: $2 \times 1.5 = 3\ \text{m}$. The shadow falls on the side of the person away from the lamp post.
2. So the tip of the shadow is $3 + 3 = 6\ \text{m}$ from the foot of the lamp post.
3. The light ray from the lamp passes over the top of her head and ends at the tip of the shadow. This gives two right triangles that share the angle at the shadow's tip: the lamp post (height $H$) with base $6\ \text{m}$, and the person (height $1.5\ \text{m}$) with base $3\ \text{m}$. Both stand vertically, so the triangles are similar.
4. In similar triangles the ratio of height to base is the same:
$$\frac{H}{6} = \frac{1.5}{3}$$
5. Therefore $H = 6 \times \dfrac{1.5}{3} = 3\ \text{m}$, which is option (B).

**KEY IDEA**

The lamp, the top of the person's head and the tip of the shadow lie on one straight light ray. The lamp post and the person are both vertical, so they form two similar right triangles that share the angle at the shadow's tip. Measure each base from the tip of the shadow: height / base is the same for both triangles.

**WATCH OUT FOR**

Using the 3 m person-to-post distance as the lamp post's base and leaving out the shadow. That gives H/3 = 1.5/3, so H = 1.5 m (option A). The lamp post's base has to run from its foot to the tip of the shadow, 3 + 3 = 6 m. A second slip is taking the shadow as 1.5 m instead of twice her height (3 m).

## GA Q.6 MCQ · 2 MARKS

General Aptitude › Numerical

Leila aspires to buy a car worth Rs. 10,00,000 after 5 years. What is the minimum amount in Rupees that she should deposit now in a bank which offers 10% annual rate of interest, if the interest was compounded annually?

**(A)** 5,00,000

**(B)** 6,21,000

**(C)** 6,66,667

**(D)** 7,50,000

Official answer: **B**

**SOLUTION**

1. With interest compounded annually, the amount after $n$ years is $A = P\left(1 + \dfrac{r}{100}\right)^n$. Here $A = 10{,}00{,}000$, $r = 10$ and $n = 5$, and we need the principal $P$.
2. Growth factor over 5 years, by squaring and multiplying: $1.1^2 = 1.21$, $1.1^4 = 1.21^2 = 1.4641$, so $1.1^5 = 1.4641 \times 1.1 = 1.61051$.
3. Divide to get the present value:
$$P = \frac{10{,}00{,}000}{1.61051} \approx 6{,}20{,}921$$
4. So she must deposit at least about Rs. 6,20,921. Of the options, 6,21,000 is the smallest one that is at least this much.

5. Check: $6{,}21{,}000 \times 1.61051 \approx 10{,}00{,}127 \geq 10{,}00{,}000$, so it is enough. Option (A) is not: $5{,}00{,}000 \times 1.61051 \approx 8{,}05{,}255 < 10{,}00{,}000$. Options (C) and (D) are enough too, but both are well above the minimum.
6. Answer: (B) 6,21,000.

**KEY IDEA**

This is a present-value problem. Undo compound growth by dividing the target amount by $\left(1+\frac{r}{100}\right)^n$. Work out $1.1^5$ as $(1.1^2)^2 \times 1.1 = 1.61051$ instead of estimating it.

**WATCH OUT FOR**

Using simple interest gives $P(1+5\times 0.1) = 1.5P$, so $P \approx 6{,}66{,}667$, which is option (C). Another mistake is to take off 10% a year from the target, or to divide by $1.5$ instead of $1.61051$. Under compound interest, (C) is enough money but it is not the minimum.

## GA Q.7 MCQ · 2 MARKS

General Aptitude › Numerical

Two alloys A and B contain gold and copper in the ratios of 2:3 and 3:7 by mass, respectively. Equal masses of alloys A and B are melted to make an alloy C. The ratio of gold to copper in alloy C is _____.

**(A)** 5:10

**(B)** 7:13

**(C)** 6:11

**(D)** 9:13

Official answer: **B**

**SOLUTION**

1. Turn each ratio into fractions of the alloy's mass. In A the parts are $2+3=5$, so gold is $\frac{2}{5}$ and copper is $\frac{3}{5}$ of A. In B the parts are $3+7=10$, so gold is $\frac{3}{10}$ and copper is $\frac{7}{10}$ of B.
2. Take the same mass of each alloy. Choosing the LCM of the part totals $5$ and $10$, that is $10\ \text{kg}$ of each, keeps every quantity a whole number. (Any common mass gives the same final ratio.)
3. Alloy A ($10\ \text{kg}$): gold $= \frac{2}{5}\times 10 = 4\ \text{kg}$, copper $= \frac{3}{5}\times 10 = 6\ \text{kg}$.
4. Alloy B ($10\ \text{kg}$): gold $= \frac{3}{10}\times 10 = 3\ \text{kg}$, copper $= \frac{7}{10}\times 10 = 7\ \text{kg}$.
5. Melting the two together adds the component masses: gold in C $= 4+3 = 7\ \text{kg}$ and copper in C $= 6+7 = 13\ \text{kg}$.
6. So gold : copper in C $= 7:13$. Check: $7+13 = 20\ \text{kg}$, which is the total mass of the two alloys ($10+10$). The answer is option (B).

**KEY IDEA**

A ratio has to be turned into fractions of the alloy's mass before alloys are mixed. With equal masses, the gold fraction of C is the plain average of the two gold fractions: $\frac{1}{2}\left(\frac{2}{5}+\frac{3}{10}\right) = \frac{7}{20}$, so copper is $\frac{13}{20}$ and the ratio is $7:13$.

**WATCH OUT FOR**

Adding the ratio terms straight across, $(2+3):(3+7) = 5:10$, which is option (A). That only works if you mix 5 units of A with 10 units of B, not equal masses. The two ratios have different part totals (5 and 10), so each has to be scaled to the same alloy mass before the gold and copper amounts are added.

## GA Q.8 MCQ · 2 MARKS

General Aptitude › Reading

The Cricket Board has long recognized John's potential as a leader of the team. However, his on-field temper has always been a matter of concern for them since his junior days. While this aggression has filled stadia with die-hard fans, it has taken a toll on his own batting. Until recently, it appeared that he found it difficult to convert his aggression into big scores. Over the past three seasons though, that picture of John

has been replaced by a cerebral, calculative and successful batsman-captain. After many years, it appears that the team has finally found a complete captain.

Which of the following statements can be logically inferred from the above paragraph?

(i) Even as a junior cricketer, John was considered a good captain.

(ii) Finding a complete captain is a challenge.

(iii) Fans and the Cricket Board have differing views on what they want in a captain.

(iv) Over the past three seasons John has accumulated big scores.

**(A)** (i), (ii) and (iii) only

**(B)** (iii) and (iv) only

**(C)** (ii) and (iv) only

**(D)** (i), (ii), (iii) and (iv)

Official answer: **C**

**SOLUTION**

1. Rule for inference questions: a statement counts only if the passage forces it to be true. A statement that is merely possible, or that stretches a word, does not count.
2. (i) is not inferred. The Board recognised John's *potential* as a leader. Potential is not the same as already being judged a good captain. The only thing the passage says about his junior days is that his temper worried the Board even then. It never says he was considered a good captain at that stage.
3. (ii) is inferred. 'After many years, it appears that the team has *finally* found a complete captain' means the search took a long time. So finding a complete captain is a challenge.
4. (iii) is not inferred. We are told only that fans enjoy his aggression and that the Board worries about his temper. The passage never says what either group *wants in a captain*, so claiming they disagree on that is a leap.
5. (iv) is inferred. Before, he 'found it difficult to convert his aggression into big scores'. Over the past three seasons that picture 'has been replaced' by a 'successful batsman-captain'. So he has been making big scores in those seasons.
6. Only (ii) and (iv) follow, so the answer is option (C).

**KEY IDEA**

Accept a statement only if the passage forces it. 'Finally found a complete captain' after 'many years' tells us such a captain is hard to find. The old picture of a batsman who could not convert aggression into big scores being 'replaced' by a 'successful batsman-captain' tells us he now scores big.

**WATCH OUT FOR**

Reading 'long recognized John's potential as a leader' as proof that he was already considered a good captain as a junior (i). Another is treating 'fans love his aggression, the Board worries about his temper' as a stated disagreement about what each wants in a captain (iii). Neither is said in the passage, so options (A), (B) and (D) all include a statement it does not support.

## GA Q.9 MCQ · 2 MARKS

General Aptitude › Statistics & probability

A cab was involved in a hit and run accident at night. You are given the following data about the cabs in the city and the accident.

(i) 85% of cabs in the city are green and the remaining cabs are blue.

(ii) A witness identified the cab involved in the accident as blue.

(iii) It is known that a witness can correctly identify the cab colour only 80% of the time.

Which of the following options is closest to the probability that the accident was caused by a blue cab?

**(A)** 12%

**(B)** 15%

**(C)** 41%

**(D)** 80%

Official answer: **C**

**SOLUTION**

1. Prior probabilities (before the witness speaks): $P(G) = 0.85$ and, since every other cab is blue, $P(B) = 1 - 0.85 = 0.15$.
2. The witness names the colour correctly 80% of the time. There are only two colours, so a wrong answer means naming the other one: $P(\text{says blue} \mid B) = 0.8$ and $P(\text{says blue} \mid G) = 1 - 0.8 = 0.2$.
3. Total probability theorem:
$$P(\text{says blue}) = P(B)\,P(\text{says blue} \mid B) + P(G)\,P(\text{says blue} \mid G) = 0.15 \times 0.8 + 0.85 \times 0.2 = 0.12 + 0.17 = 0.29$$
4. Bayes' theorem:
$$P(B \mid \text{says blue}) = \frac{P(B)\,P(\text{says blue} \mid B)}{P(\text{says blue})} = \frac{0.12}{0.29} \approx 0.414$$
5. So the probability is about 41%, which is option (C).

**KEY IDEA**

This is Bayes' theorem. A witness saying "blue" can come from two routes: a blue cab named correctly ( $0.15 \times 0.8 = 0.12$) or a green cab named wrongly ( $0.85 \times 0.2 = 0.17$). The answer is the share of the first route in the total, $\frac{0.12}{0.12+0.17}$. Green cabs are so common that their 20% misidentifications outnumber the correct "blue" calls.

**WATCH OUT FOR**

Picking 80% (D) because the witness is 80% reliable, which ignores how few cabs are blue. Picking 15% (B) is the opposite mistake: it uses only the proportion of blue cabs and ignores the witness. Picking 12% (A) means stopping at $P(B)\,P(\text{says blue} \mid B)$ without dividing by $P(\text{says blue}) = 0.29$.

## GA Q.10 MCQ · 2 MARKS

General Aptitude › Reading

A coastal region with unparalleled beauty is home to many species of animals. It is dotted with coral reefs and unspoilt white sandy beaches. It has remained inaccessible to tourists due to poor connectivity and lack of accommodation. A company has spotted the opportunity and is planning to develop a luxury resort with helicopter service to the nearest major city airport. Environmentalists are upset that this would lead to the region becoming crowded and polluted like any other major beach resorts.

Which one of the following statements can be logically inferred from the information given in the above paragraph?

**(A)** The culture and tradition of the local people will be influenced by the tourists.

**(B)** The region will become crowded and polluted due to tourism.

**(C)** The coral reefs are on the decline and could soon vanish.

**(D)** Helicopter connectivity would lead to an increase in tourists coming to the region.

Official answer: **D**

**SOLUTION**

1. **What counts as an inference:** the statement must follow from the facts given in the passage. It cannot rest on outside knowledge, and it cannot rest only on the opinion of a group the passage mentions.
2. **The stated cause:** the region "has remained inaccessible to tourists due to poor connectivity and lack of accommodation." The passage names exactly two things that keep tourists away: poor connectivity and no accommodation.

3. **The planned change:** the company will build a luxury resort, which removes the accommodation problem, and run a helicopter service to the nearest major city airport, which removes the connectivity problem. The helicopter service takes away exactly the obstacle the passage blames, so tourists who could not reach the region before will be able to. The passage also says the company "has spotted the opportunity", and that opportunity is the arrival of visitors. So better connectivity would bring more tourists. That is option (D), which uses the cautious "would", in line with the passage.
4. **Option (A):** the passage never mentions local people, their culture or their traditions. This needs information the passage does not give, so reject it.
5. **Option (B):** the passage says only that environmentalists "are upset that this would lead to" crowding and pollution. That is a fear held by one group, not a fact the passage states. Also, "will become" claims a certainty the passage does not support. Reject it.
6. **Option (C):** the passage says only that the region "is dotted with coral reefs". Nothing says the reefs are declining or could vanish. Reject it.
7. Only (D) follows directly from the passage's own cause-and-effect statement. The answer is **(D)**.

**KEY IDEA**

The passage says outright why tourists stay away: poor connectivity (and a lack of accommodation). If the plan removes that stated cause, you can infer that the effect reverses and more tourists come. That inference rests on the passage's own facts. A claim that rests only on what one group fears does not count.

**WATCH OUT FOR**

Picking (B) because the passage mentions crowding and pollution. Those words come from the environmentalists' worry ("are upset that this would lead to"), not from a fact the passage states, and "will become" turns that worry into a certainty. (A) and (C) also fail because they bring in things the passage never mentions: local culture, and reefs in decline.

## Electronics and Communication Engineering Q.1 to Q.55

### Q.1 MCQ · 1 MARK

Analog Electronics › Amplifiers

Q.1 Two identical nMOS transistors $M_1$ and $M_2$ are connected as shown below. The circuit is used as an amplifier with the input connected between G and S terminals and the output taken between D and S terminals. $V_{bias}$ and $V_D$ are so adjusted that both transistors are in saturation. The transconductance of this combination is defined as $g_m = \frac{\partial i_D}{\partial v_{GS}}$ while the output resistance is $r_o = \frac{\partial v_{DS}}{\partial i_D}$, where $i_D$ is the current flowing into the drain of $M_2$. Let $g_{m1}$, $g_{m2}$ be the transconductances and $r_{o1}$, $r_{o2}$ be the output resistances of transistors $M_1$ and $M_2$, respectively.

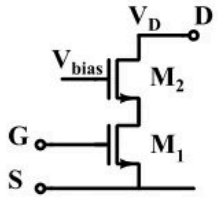


Which of the following statements about estimates for $g_m$ and $r_o$ is correct?

(A) $g_m \approx g_{m1}.g_{m2}.r_{o2}$ and $r_o \approx r_{o1} + r_{o2}$.
(B) $g_m \approx g_{m1} + g_{m2}$ and $r_o \approx r_{o1} + r_{o2}$.
(C) $g_m \approx g_{m1}$ and $r_o \approx r_{o1}.g_{m2}.r_{o2}$.
(D) $g_m \approx g_{m1}$ and $r_o \approx r_{o2}$.

Official answer: **C**

**SOLUTION**

1. **Identify the circuit.** $M_1$ is a common-source stage driven at G. $M_2$ has its gate at the DC voltage $V_{\text{bias}}$, which is an AC ground, so it is a common-gate stage stacked on top of $M_1$. Together they form an nMOS **cascode**. Both devices are in saturation, so each one's small-signal model is a controlled current source $g_m v_{gs}$ (drain to source) in parallel with $r_o$. Assumptions: body effect is neglected (no body terminals are drawn), and $g_m r_o \gg 1$ for each device.
2. Let $X$ be the node joining the source of $M_2$ to the drain of $M_1$, and let $v_x$ be its small-signal voltage. Since the gate of $M_2$ is at AC ground, $v_{gs2} = -v_x$. The current $i_D$ enters the drain of $M_2$ and flows down through $M_2$ and then $M_1$ to S. The same current flows in both devices.
3. **Transconductance** (output shorted, $v_{ds} = 0$). The current through $M_2$ is
$$i_D = g_{m2}(-v_x) + \frac{0 - v_x}{r_{o2}} = -v_x\left(g_{m2} + \frac{1}{r_{o2}}\right)$$
so $v_x \approx -\dfrac{i_D}{g_{m2}}$. This is small, because node $X$ looks into the source of $M_2$ and sees only about $1/g_{m2}$.
4. The same current flows down through $M_1$: $i_D = g_{m1}v_{gs} + \dfrac{v_x}{r_{o1}}$. Substituting $v_x$ gives
$$i_D\left(1 + \frac{1}{g_{m2}r_{o1}}\right) \approx g_{m1}v_{gs} \;\Rightarrow\; g_m = \frac{i_D}{v_{gs}} \approx g_{m1} \quad (g_{m2}r_{o1} \gg 1)$$
Almost none of $M_1$'s signal current is lost in $r_{o1}$, so $M_2$ passes it through to the output.
5. **Output resistance** (input shorted, $v_{gs} = 0$). With $v_{gs} = 0$ the controlled source of $M_1$ is off, so $M_1$ is just $r_{o1}$ carrying $i_D$: $v_x = i_D r_{o1}$.

6. Current through $M_2$: $i_D = g_{m2}(-v_x) + \dfrac{v_{ds} - v_x}{r_{o2}}$, so $v_{ds} = v_x + r_{o2}\,(i_D + g_{m2}v_x)$. Substituting $v_x = i_D r_{o1}$:

$$r_o = \frac{v_{ds}}{i_D} = r_{o1} + r_{o2} + g_{m2}r_{o2}r_{o1} \approx g_{m2}r_{o2}r_{o1}$$

The product term dominates because $g_{m2}r_{o2} \gg 1$ and $g_{m2}r_{o1} \gg 1$.

7. **Result:** $g_m \approx g_{m1}$ and $r_o \approx r_{o1}\,g_{m2}\,r_{o2}$. This is option **(C)**. A cascode keeps the transconductance of $M_1$ and multiplies its output resistance by the intrinsic gain $g_{m2}r_{o2}$ of $M_2$.

**KEY IDEA**

This is a cascode: $M_1$ is common-source and $M_2$, with its gate at AC ground, is common-gate. Looking into the source of $M_2$, node $X$ sees only about $1/g_{m2}$, so all of $M_1$'s signal current $g_{m1}v_{gs}$ reaches the output and $g_m \approx g_{m1}$. Looking down from the drain, $M_2$ is a transistor with source degeneration $r_{o1}$. That multiplies the resistance by $M_2$'s intrinsic gain: $r_o = r_{o1} + r_{o2} + g_{m2}r_{o2}r_{o1} \approx g_{m2}r_{o2}r_{o1}$.

**WATCH OUT FOR**

Adding the two output resistances in series ( $r_o \approx r_{o1} + r_{o2}$, as in (A) and (B)). That treats $M_2$ as a plain resistor. When $v_x$ rises, $v_{gs2} = -v_x$ falls, and $M_2$ 's controlled source $g_{m2}v_{gs2}$ works against the change in current. That feedback produces the dominant $g_{m2}r_{o2}r_{o1}$ term. Picking (D), $r_o \approx r_{o2}$, ignores $M_1$ altogether. Writing $g_m \approx g_{m1} + g_{m2}$ treats the devices as if they were in parallel, but they are stacked, carry the same current, and only $M_1$ is driven by the input.

## Q.2 MCQ · 1 MARK

Analog Electronics › Op-amps

Q.2 In the circuit shown below, the op-amp is ideal and Zener voltage of the diode is 2.5 volts. At the input, unit step voltage is applied, i.e. $v_{IN}(t) = u(t)$ volts. Also, at $t = 0$, the voltage across each of the capacitors is zero.

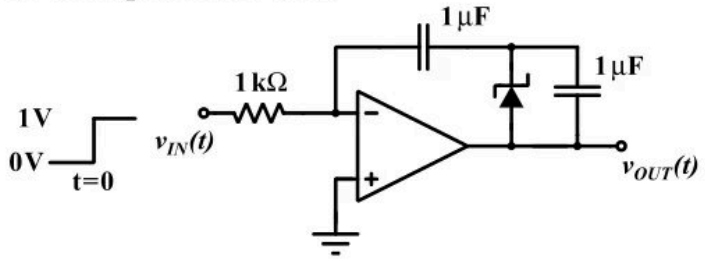


The time $t$, in milliseconds, at which the output voltage $v_{OUT}$ crosses $-10$ V is

(A) 2.5 (B) 5 (C) 7.5 (D) 10

Official answer: **C**

**SOLUTION**

1. **Assumptions.** The op-amp is ideal, so the inputs form a virtual short, $v_- = v_+ = 0$, and no current enters either input. No supply rails are given, so the output is taken as unsaturated. The feedback network is $C_1 = 1\ \mu$F in series with the parallel pair (Zener $\|$ $C_2 = 1\ \mu$F). The Zener's cathode is at the node between the capacitors and its anode is at the output. ($C_1$ and $C_2$ are our labels; the figure prints only $1\ \mu$F on each.)

2. **Input current for $t > 0$.** With the inverting node at virtual ground, Ohm's law gives $i = \dfrac{1\text{ V}}{1\text{ k}\Omega} = 1\text{ mA}$. None of it enters the op-amp, so this constant current flows through the feedback network towards the output.

3. **Phase 1 (Zener off).** The same current charges $C_1$ and $C_2$ in series, $C_{eq} = \dfrac{1 \times 1}{1 + 1}\ \mu\text{F} = 0.5\ \mu\text{F}$. Both capacitors start uncharged, so

$$v_{OUT}(t) = -\frac{i\,t}{C_{eq}} = -\frac{10^{-3}}{0.5 \times 10^{-6}}\,t = -2\text{ V/ms} \times t$$

4. **When the Zener breaks down.** The voltage across $C_2$, which is also the voltage across the Zener, is $v_{C2} = \dfrac{i\,t}{C_2} = 1\ \text{V/ms} \times t$. Current flows from the middle node through $C_2$ to the output, so the middle node (the cathode) is the positive side. The Zener is therefore reverse-biased and carries no current until $v_{C2} = V_Z = 2.5\ \text{V}$, which happens at $t = 2.5\ \text{ms}$. At that moment $v_{OUT} = -2 \times 2.5 = -5\ \text{V}$, so the output has not yet reached $-10\ \text{V}$.
5. **Phase 2 (Zener in breakdown).** The Zener holds $v_{C2}$ at $2.5\ \text{V}$, so $C_2$ takes no more current and the Zener carries the whole 1 mA. Only $C_1$ keeps charging, and it has been carrying $i$ since $t = 0$: $v_{C1} = \dfrac{i\,t}{C_1} = 1\ \text{V/ms} \times t$.
6. **KVL** from the virtual ground through the feedback path to the output:
$$v_{OUT}(t) = -\left(v_{C1} + V_Z\right) = -\left(t_{\text{ms}} + 2.5\right)\ \text{V}, \quad t \geq 2.5\ \text{ms}$$
The slope is now $-1\ \text{V/ms}$. Check: at $t = 2.5\ \text{ms}$ this gives $-5\ \text{V}$, which matches the end of Phase 1, so the output is continuous.
7. **Crossing $-10\ \text{V}$.** Set $v_{OUT} = -10\ \text{V}$: $t_{\text{ms}} + 2.5 = 10 \Rightarrow t = 7.5\ \text{ms}$. This is option (C).

**KEY IDEA**

A constant 1 mA flows through the feedback network. At first it charges both capacitors in series (0.5 µF), so the output falls at 2 V/ms. Once $C_2$ reaches 2.5 V, the reverse-biased Zener clamps it and carries all the current. From then on only $C_1$ (1 µF) charges, so the output falls at 1 V/ms and carries a fixed 2.5 V offset: $v_{OUT} = -(t_{\text{ms}} + 2.5)$ V.

**WATCH OUT FOR**

There are three common slips, each giving one of the wrong options. Treating the circuit as a plain integrator with the series 0.5 µF for the whole time gives 5 ms (B). Using only $C_1$ from $t = 0$, or forgetting the 2.5 V held across the clamped $C_2$ in Phase 2, gives 10 ms (D). Stopping at the Zener breakdown time gives 2.5 ms (A). In Phase 2, $C_1$'s voltage keeps growing from its value at $t = 0$, not from zero, and the Zener's 2.5 V adds to it.

## Q.3 MCQ · 1 MARK

Analog Electronics › Feedback & oscillators

A good transimpedance amplifier has

**(A)** low input impedance and high output impedance.

**(B)** high input impedance and high output impedance.

**(C)** high input impedance and low output impedance.

**(D)** low input impedance and low output impedance.

Official answer: **D**

**SOLUTION**

1. **Definition.** A transimpedance (transresistance) amplifier takes a **current** in and gives a **voltage** out. Its gain is $R_m = \dfrac{v_o}{i_i}$, measured in $\text{V/A} = \Omega$. The ideal version is a current-controlled voltage source.
2. **Input side (current sensing).** Model the signal source as a Norton current source $i_s$ with a shunt resistance $R_s$. By the current divider, $i_i = i_s \dfrac{R_s}{R_s + R_{in}}$. For $i_i \to i_s$ we need $R_{in} \ll R_s$. So the ideal input impedance is **low**, with $R_{in} \to 0$. The input behaves like an ammeter, which must present almost no resistance.
3. **Output side (voltage delivery).** Model the output as a Thevenin source $R_m i_i$ in series with $R_{out}$, driving a load $R_L$. By the voltage divider, $v_o = R_m i_i \dfrac{R_L}{R_L + R_{out}}$. For $v_o$ not to depend on the load we need $R_{out} \ll R_L$. So the ideal output impedance is **low**, with $R_{out} \to 0$, as for any ideal voltage source.

4. **Feedback check.** A practical transimpedance amplifier uses shunt-shunt feedback, which samples the output voltage and mixes at the input as a current. With loop gain $A\beta$, $R_{in,f} = \dfrac{R_{in}}{1 + A\beta}$ and $R_{out,f} = \dfrac{R_{out}}{1 + A\beta}$. Both impedances are reduced by the factor $1 + A\beta$, which matches the ideal from steps 2 and 3.
5. A good transimpedance amplifier therefore has low input impedance and low output impedance, which is option (D).

**KEY IDEA**

Let the input and output quantities decide the impedances. Sensing a current needs a low input impedance, because a current divider only passes all of $i_s$ when $R_{in} \to 0$. Delivering a voltage needs a low output impedance, because a voltage divider only passes all of the voltage to the load when $R_{out} \to 0$. Shunt-shunt feedback, the topology used for transimpedance amplifiers, lowers both impedances by the factor $1 + A\beta$.

**WATCH OUT FOR**

Going by habit and picking (C), high input and low output impedance. That is the ideal voltage amplifier, which senses a voltage. Option (A) is the ideal current amplifier and option (B) is the ideal transconductance amplifier, which senses a voltage and delivers a current. Some students also read 'impedance' in the name as a hint that the input impedance should be high, but a current input needs a low input impedance.

## Q.4 MCQ · 1 MARK

Control Systems › Block diagrams & SFG

Let the input be $u$ and the output be $y$ of a system, and the other parameters are real constants. Identify which among the following systems is not a linear system:

**(A)** $\dfrac{d^3y}{dt^3} + a_1\dfrac{d^2y}{dt^2} + a_2\dfrac{dy}{dt} + a_3y = b_3u + b_2\dfrac{du}{dt} + b_1\dfrac{d^2u}{dt^2}$ (with initial rest conditions)

**(B)** $y(t) = \displaystyle\int_0^t e^{\alpha(t-\tau)}\beta u(\tau)\,d\tau$

**(C)** $y = au + b, \quad b \neq 0$

**(D)** $y = au$

Official answer: **C**

**SOLUTION**

1. **The test is superposition.** A system is linear only if it is additive and homogeneous: an input $k_1u_1 + k_2u_2$ must give the output $k_1y_1 + k_2y_2$. Setting $k_1 = k_2 = 0$ gives a quick necessary check: **zero input must give zero output**.
2. **(A)** This is a linear ODE with constant coefficients. Every term is first-degree in $y$, $u$ or one of their derivatives, and no term multiplies two of them together. Initial rest means all initial conditions are zero, so there is no stored-energy (zero-input) term, and the output depends linearly on the input. So (A) is linear.
3. **(B)** This is a convolution integral, $y(t) = \int_0^t h(t-\tau)\,u(\tau)\,d\tau$, with kernel $h(t-\tau) = \beta e^{\alpha(t-\tau)}$. The kernel does not depend on $u$. Integration is linear, so the input $k_1u_1 + k_2u_2$ gives $k_1y_1 + k_2y_2$. So (B) is linear.
4. **(D)** $y = au$ is a pure gain: $a(k_1u_1 + k_2u_2) = k_1(au_1) + k_2(au_2)$. So (D) is linear.
5. **(C), zero-input test.** Put $u = 0$. Then $y = b \neq 0$. A linear system must give $y = 0$ for zero input, so (C) fails.
6. **(C), additivity check.** Input $u_1$ gives $y_1 = au_1 + b$ and input $u_2$ gives $y_2 = au_2 + b$. Input $u_1 + u_2$ gives
$$a(u_1 + u_2) + b \;\neq\; y_1 + y_2 = a(u_1 + u_2) + 2b \quad (\text{since } b \neq 0).$$
Superposition fails. The graph of $y$ against $u$ is a straight line, but it does not pass through the origin, so the map is **affine**, not linear.

7. (C) is the only system that is not linear. **Answer: (C).**

**KEY IDEA**

A linear system must obey superposition (additivity plus homogeneity). A necessary consequence is that zero input gives zero output. A constant offset $b \neq 0$ breaks this, so $y = au + b$ is affine, not linear. A constant-coefficient ODE at initial rest and a convolution integral are both linear.

**WATCH OUT FOR**

Calling $y = au + b$ linear because its graph is a straight line. A straight line through the origin is linear; any other straight line is affine. A second trap is doubting (A) because it contains derivatives of $u$. Derivatives are linear operators, and initial rest removes any zero-input response, so (A) is linear.

## Q.5 MCQ · 1 MARK

Control Systems › Nyquist

The Nyquist stability criterion and the Routh criterion both are powerful analysis tools for determining the stability of feedback controllers. Identify which of the following statements is FALSE:

**(A)** Both the criteria provide information relative to the stable gain range of the system.

**(B)** The general shape of the Nyquist plot is readily obtained from the Bode magnitude plot for all minimum-phase systems.

**(C)** The Routh criterion is not applicable in the condition of transport lag, which can be readily handled by the Nyquist criterion.

**(D)** The closed-loop frequency response for a unity feedback system cannot be obtained from the Nyquist plot.

Official answer: **D**

**SOLUTION**

1. **(A)** Routh: form the array with the gain $K$ as a parameter. No sign change in the first column gives the stable range of $K$ directly. Nyquist: the critical gain is the one that makes the plot pass through $-1 + j0$, and the gain margin follows from it. That is also the stable gain range. So (A) is **TRUE**.
2. **(B)** For a minimum-phase system, Bode's gain-phase relation fixes the phase once $|G(j\omega)|$ is known over all $\omega$. So the Bode magnitude plot gives both $|G(j\omega)|$ and $\angle G(j\omega)$, and with them the general shape of the polar (Nyquist) plot. So (B) is **TRUE**.
3. **(C)** With a transport lag, the characteristic equation $1 + G(s)e^{-sT} = 0$ is transcendental, not a polynomial in $s$. Routh cannot be applied to it without an approximation such as Padé. In the Nyquist plot, $e^{-j\omega T}$ has $|e^{-j\omega T}| = 1$ and only adds a phase of $-\omega T$. The delay is therefore handled exactly. So (C) is **TRUE**.
4. **(D)** For unity feedback,

$$T(j\omega) = \frac{G(j\omega)}{1 + G(j\omega)}$$

Each point $P$ of the Nyquist plot is $G(j\omega)$. The phasor from the origin to $P$ is $G(j\omega)$, and the phasor from $-1 + j0$ to $P$ is $1 + G(j\omega)$. Hence

$$|T(j\omega)| = \frac{|G(j\omega)|}{|1 + G(j\omega)|}, \qquad \angle T(j\omega) = \angle G(j\omega) - \angle\left(1 + G(j\omega)\right)$$

These can be read off the plot at every $\omega$.

5. The constant-$M$ and constant-$N$ circles apply this same idea. They are drawn on the $G(j\omega)$ plane so that $M_r$, $\omega_r$ and the closed-loop bandwidth can be read directly off the Nyquist plot. So the claim that the closed-loop frequency response 'cannot be obtained' from the Nyquist plot is **FALSE**.
6. (D) is the only FALSE statement, so the answer is **(D)**.

**KEY IDEA**

A Nyquist plot shows $G(j\omega)$ as a set of phasors. With unity feedback, the phasor from $-1+j0$ to any point is $1+G(j\omega)$, so $T(j\omega)=G/(1+G)$ is fixed point by point. This is what the M and N circles are built on. The other three statements are standard facts: both criteria give the stable gain range, Bode's gain-phase relation holds for minimum-phase systems, and Routh needs a polynomial while Nyquist handles $e^{-j\omega T}$ exactly.

**WATCH OUT FOR**

One common mistake is to pick (B), thinking a magnitude plot alone can never give phase. For minimum-phase systems, Bode's gain-phase relation says it does. Another is to pick (C), thinking Routh can handle a delay directly. Routh needs a polynomial characteristic equation, so it works only after a Padé approximation, while Nyquist treats $e^{-j\omega T}$ exactly. Students also forget that the Nyquist plot gives the closed-loop response through $|1+G|$, measured from the $-1$ point.

## Q.6 MCQ · 1 MARK

Control Systems › Routh–Hurwitz

Consider $p(s)=s^3+a_2s^2+a_1s+a_0$ with all real coefficients. It is known that its derivative $p'(s)$ has no real roots. The number of real roots of $p(s)$ is

**(A)** 0

**(B)** 1

**(C)** 2

**(D)** 3

Official answer: **B**

**SOLUTION**

1. Differentiate: $p'(s)=3s^2+2a_2s+a_1$. This is a real quadratic with leading coefficient $3>0$.
2. It has no real roots, so its discriminant is negative: $(2a_2)^2-4(3)(a_1)=4a_2^2-12a_1<0$. A quadratic with a positive leading coefficient and no real roots never changes sign, so it stays positive: $p'(s)>0$ for every real $s$.
3. Since $p'(s)>0$ everywhere, $p(s)$ is **strictly increasing** on the whole real line.
4. Check the ends. The leading term $s^3$ dominates, so $p(s)\to-\infty$ as $s\to-\infty$ and $p(s)\to+\infty$ as $s\to+\infty$. $p$ is continuous, so by the intermediate value theorem it crosses zero **at least once**.
5. A strictly increasing function can take the value $0$ at most once, so $p(s)$ has **exactly one** real root $s=r$.
6. That root is simple, because $p'(r)>0\neq0$. Write $p(s)=(s-r)\,q(s)$, where $q$ is a real quadratic. If $q$ had a real root, $p$ would have a second real zero (or a repeated one at $r$, which would force $p'(r)=0$). So the other two roots are a complex-conjugate pair $\sigma\pm j\omega$ with $\omega\neq0$, which is what real coefficients require.
7. Check with an example: $p(s)=s^3+s$ gives $p'(s)=3s^2+1$, which has no real roots. Then $p(s)=s(s^2+1)$ has roots $0$ and $\pm j$, so exactly one root is real.
8. The number of real roots of $p(s)$ is $1$, which is option (B).

**KEY IDEA**

A real quadratic $p'(s)$ with no real roots and a positive leading coefficient is positive everywhere. So the cubic $p(s)$ is strictly increasing. It runs from $-\infty$ to $+\infty$, so it crosses the real axis exactly once. The other two roots have to be a complex-conjugate pair.

**WATCH OUT FOR**

Answering 3, from 'a cubic has three roots', without asking which of them are real. Or answering 0, from reading 'p'(s) has no real roots' as a statement about p(s). An odd-degree real polynomial always has at least one real root, so 0 is never possible here. Some students also reach for the Routh array because of the topic tag. Routh counts right-half-plane roots, not real roots, so it does not answer this question.

## Q.7 MCQ · 1 MARK

Electronic Devices › P-N junction

In a p-n junction diode at equilibrium, which one of the following statements is NOT TRUE?

**(A)** The hole and electron diffusion current components are in the same direction.

**(B)** The hole and electron drift current components are in the same direction.

**(C)** On an average, holes and electrons drift in opposite direction.

**(D)** On an average, electrons drift and diffuse in the same direction.

Official answer: **D**

**SOLUTION**

1. At equilibrium the net current is zero for each carrier type separately: (hole diffusion current) $= -$ (hole drift current), and (electron diffusion current) $= -$ (electron drift current).
2. The built-in field $E$ inside the depletion region points from the n-side to the p-side (n-side carries net positive space charge from ionised donors, p-side net negative space charge from ionised acceptors).
3. Holes (positive charge) are pushed along $E$: hole drift motion (and hence hole drift current, since current direction matches the motion direction for a positive carrier) flows from the n-side to the p-side.
4. Holes diffuse from where their concentration is high (p-side, majority carriers) to where it is low (n-side): hole diffusion current flows from the p-side to the n-side, opposite to the hole drift current, consistent with zero net hole current.
5. Electrons (negative charge) are pushed opposite to $E$: electron drift *motion* is from the p-side to the n-side. Since conventional current is opposite to electron motion, the electron drift *current* flows from the n-side to the p-side.
6. Electrons diffuse from where their concentration is high (n-side, majority carriers) to where it is low (p-side): electron diffusion *motion* is from the n-side to the p-side. The corresponding electron diffusion *current* (opposite to motion) flows from the p-side to the n-side.
7. Check (A): hole diffusion current (p-side $\rightarrow$ n-side) and electron diffusion current (p-side $\rightarrow$ n-side), same direction, so (A) is TRUE.
8. Check (B): hole drift current (n-side $\rightarrow$ p-side) and electron drift current (n-side $\rightarrow$ p-side), same direction, so (B) is TRUE.
9. Check (C): hole drift *motion* (n-side $\rightarrow$ p-side) and electron drift *motion* (p-side $\rightarrow$ n-side) are opposite, so the statement 'holes and electrons drift in opposite direction' is TRUE.
10. Check (D): electron drift *motion* (p-side $\rightarrow$ n-side) and electron diffusion *motion* (n-side $\rightarrow$ p-side) are OPPOSITE to each other, so the claim in (D), that electrons drift and diffuse in the same direction, is FALSE. This makes (D) the statement that is NOT TRUE.

**KEY IDEA**

At thermal equilibrium in a p-n junction, drift and diffusion currents cancel separately for holes and for electrons. For each carrier, the drift direction (driven by the built-in field) and the diffusion direction (driven by its own concentration gradient) are opposite to each other. This is exactly what makes the net current zero, and it is the physics tested by option (D).

**WATCH OUT FOR**

Conflating "current direction" with "physical motion direction" for electrons. Because electrons carry negative charge, their conventional current flows opposite to their physical motion, so a careless solver equates "electron drift and diffusion currents are in the same direction" with "electron drift and diffusion motions are in the same direction"; these are two different (and here, oppositely-signed) comparisons, and mixing them up can flip the answer between (B) and (D).

## Q.8 MCQ · 1 MARK

Digital Electronics › Logic families

Q.8 The logic function $f(X, Y)$ realized by the given circuit is

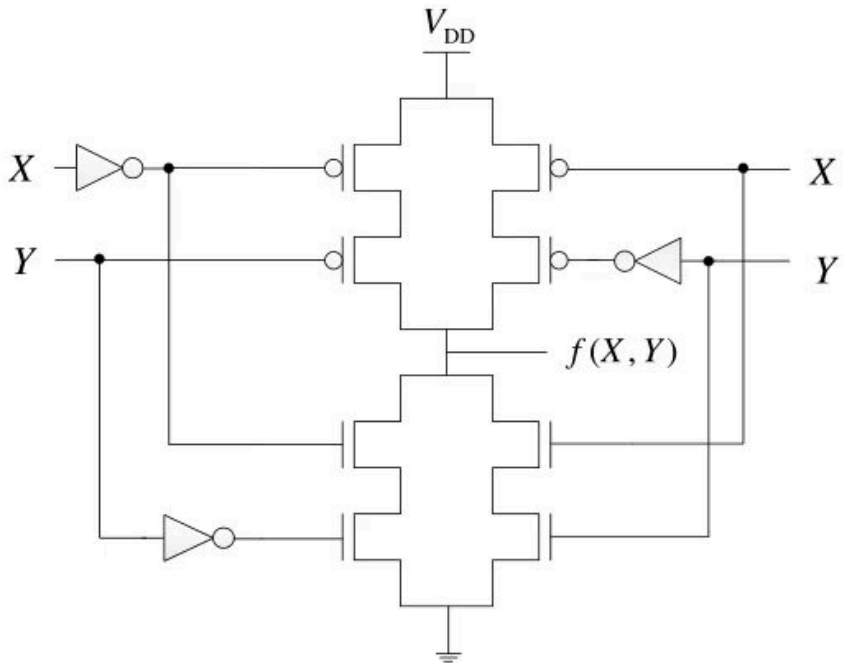


(A) NOR (B) AND (C) NAND (D) XOR

Official answer: **D**

**SOLUTION**

1. Notation: $\overline{A}$ means the complement of $A$. Read the gate signals off the figure. Pull-up network (PMOS): the series pair $\{\overline{X}, Y\}$ in parallel with the series pair $\{X, \overline{Y}\}$. Pull-down network (NMOS): the series pair $\{\overline{X}, \overline{Y}\}$ in parallel with the series pair $\{X, Y\}$.
2. Rules for a CMOS gate: a PMOS conducts when its gate is 0, and an NMOS conducts when its gate is 1. Transistors in series conduct only if all of them conduct (AND). Parallel branches conduct if any one of them conducts (OR). A conducting pull-up network drives $f = 1$, and a conducting pull-down network drives $f = 0$.
3. The pull-up network conducts ($f = 1$) when ($\overline{X} = 0$ and $Y = 0$) or ($X = 0$ and $\overline{Y} = 0$). That is, when $(X = 1, Y = 0)$ or $(X = 0, Y = 1)$:
$$f = X\overline{Y} + \overline{X}Y$$
4. The pull-down network conducts ($f = 0$) when ($\overline{X} = 1$ and $\overline{Y} = 1$) or ($X = 1$ and $Y = 1$). That is, when $(X = 0, Y = 0)$ or $(X = 1, Y = 1)$:
$$\overline{f} = \overline{X}\,\overline{Y} + XY$$
This is exactly the complement of the pull-up expression. For every input, exactly one network conducts, so the output is never floating and never shorted.
5. Truth-table check. $XY = 00$: the left NMOS branch is on, so $f = 0$. $XY = 01$: the right PMOS branch is on, so $f = 1$. $XY = 10$: the left PMOS branch is on, so $f = 1$. $XY = 11$: the right NMOS branch is on, so $f = 0$.
6. So $f = X\overline{Y} + \overline{X}Y = X \oplus Y$, which is XOR. The answer is option (D).

**KEY IDEA**

Find the output from the pull-up network: it conducts, making $f = 1$, when every PMOS in some series branch has gate 0. Then check with the pull-down network: it conducts, making $f = 0$, when every NMOS in some series branch has gate 1. Both networks here are parallel pairs of series transistors, so this is not the usual series-parallel dual of a static CMOS gate. The two networks are still logically complementary, because the inverters feed each network a different mix of true and complemented inputs.

**WATCH OUT FOR**

The most common slip is reading the pull-down network as if it gave $f$ directly. Its expression $\overline{X}\,\overline{Y} + XY$ (XNOR) is when the output is pulled LOW, so it gives $\overline{f}$, not $f$. The other common slip is missing the input inverters, especially the right-hand one that feeds $\overline{Y}$ to a PMOS while the plain $Y$ goes to an NMOS. That changes which branch conducts for each input.

## Q.9 MCQ · 1 MARK

Digital Electronics › Boolean logic

A function $F(A, B, C)$ defined by three Boolean variables $A$, $B$ and $C$ when expressed as sum of products is given by

$$F = \overline{A} \cdot \overline{B} \cdot \overline{C} + \overline{A} \cdot B \cdot \overline{C} + A \cdot \overline{B} \cdot \overline{C}$$

where, $\overline{A}$, $\overline{B}$, and $\overline{C}$ are the complements of the respective variables. The product of sums (POS) form of the function F is

**(A)** $F = (A + B + C) \cdot (A + \overline{B} + C) \cdot (\overline{A} + B + C)$

**(B)** $F = (\overline{A} + \overline{B} + \overline{C}) \cdot (\overline{A} + B + \overline{C}) \cdot (A + \overline{B} + \overline{C})$

**(C)** $F = (A + B + \overline{C}) \cdot (A + \overline{B} + \overline{C}) \cdot (\overline{A} + B + \overline{C}) \cdot (\overline{A} + \overline{B} + C) \cdot (\overline{A} + \overline{B} + \overline{C})$

**(D)** $F = (\overline{A} + \overline{B} + C) \cdot (\overline{A} + B + C) \cdot (A + \overline{B} + C) \cdot (A + B + \overline{C}) \cdot (A + B + C)$

Official answer: **C**

**SOLUTION**

1. Complements are written with ¯ throughout. Turn each product term into its minterm by reading an uncomplemented variable as 1 and a complemented one as 0: $\overline{A}\,\overline{B}\,\overline{C} = (000)_2 = m_0$, $\overline{A}B\overline{C} = (010)_2 = m_2$, $A\overline{B}\,\overline{C} = (100)_2 = m_4$.
2. So $F = \sum m(0, 2, 4)$. $F$ is 1 on exactly these three input combinations and 0 on the other five: $m_1, m_3, m_5, m_6, m_7$.
3. The canonical POS is the product of the maxterms at which $F = 0$: $F = \prod M(1, 3, 5, 6, 7)$.
4. Write each maxterm by reading a 0 as the plain variable and a 1 as its complement (the opposite of the minterm rule): $M_1 = (001)_2 \to (A + B + \overline{C})$, $M_3 = (011)_2 \to (A + \overline{B} + \overline{C})$, $M_5 = (101)_2 \to (\overline{A} + B + \overline{C})$, $M_6 = (110)_2 \to (\overline{A} + \overline{B} + C)$, $M_7 = (111)_2 \to (\overline{A} + \overline{B} + \overline{C})$.
5. $$F = (A + B + \overline{C})(A + \overline{B} + \overline{C})(\overline{A} + B + \overline{C})(\overline{A} + \overline{B} + C)(\overline{A} + \overline{B} + \overline{C})$$ This is option (C), with the factors in the same order.
6. Check the others. Every factor in every option contains all three variables, so each factor is a single maxterm, and a product of maxterms is 0 exactly at those maxterm numbers. (A) is $(A + B + C)(A + \overline{B} + C)(\overline{A} + B + C) = \prod M(0, 2, 4)$, which is 0 at $m_0, m_2, m_4$, exactly where $F$ should be 1. (B) is $(\overline{A} + \overline{B} + \overline{C})(\overline{A} + B + \overline{C})(A + \overline{B} + \overline{C}) = \prod M(7, 5, 3)$, which is 0 only at 3, 5 and 7. It is 1 at $m_1$ and $m_6$, where $F = 0$. (D) is $\prod M(6, 4, 2, 1, 0)$, which is 0 at $m_0, m_2, m_4$, where $F = 1$. So only (C) works.
7. Quick algebraic check. Simplify the SOP: $F = \overline{C}\,(\overline{A}\,\overline{B} + \overline{A}B + A\overline{B}) = \overline{C}\,(\overline{A} + A\overline{B}) = \overline{C}\,(\overline{A} + \overline{B})$.
8. Now simplify option (C) with the adjacency rule $(X + Y)(X + \overline{Y}) = X$, reusing $M_7$ where needed (allowed because $X \cdot X = X$). $M_1M_3 = (A + \overline{C} + B)(A + \overline{C} + \overline{B}) = A + \overline{C}$. $M_5M_7 = (\overline{A} + \overline{C} +$

$B)(\overline{A}+\overline{C}+\overline{B})=\overline{A}+\overline{C}$. $M_6M_7=(\overline{A}+\overline{B}+C)(\overline{A}+\overline{B}+\overline{C})=\overline{A}+\overline{B}$. Then $(A+\overline{C})(\overline{A}+\overline{C})=\overline{C}$, so option (C) $=\overline{C}\,(\overline{A}+\overline{B})$, the same as $F$. The answer is (C).

**KEY IDEA**

For a function of $n$ variables, the minterms and maxterms split the $2^n$ input numbers between them. If $F=\sum m(S)$, then its canonical POS is $\prod M$ over every number not in $S$. Here $F=\sum m(0,2,4)$, so the POS is $\prod M(1,3,5,6,7)$. For a maxterm, a 0 bit gives the plain variable and a 1 bit gives its complement.

**WATCH OUT FOR**

The usual mistake is to keep the same indices and write $\prod M(0,2,4)$, which is option (A). Its factors are 0 exactly where $F$ should be 1. The other is writing each maxterm with the minterm literal rule (a 1 bit as the plain variable). That turns $\prod M(1,3,5,6,7)$ into the wrong-looking option (D) and is a quick way to lose the mark.

## Q.10 MCQ · 1 MARK

Electromagnetics › Transmission lines

Q.10 The points $P$, $Q$, and $R$ shown on the Smith chart (normalized impedance chart) in the following figure represent:

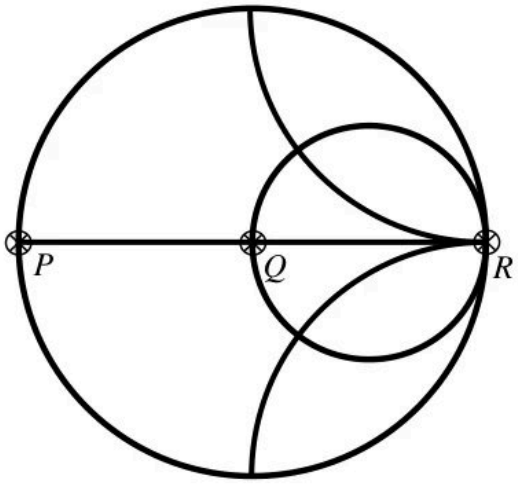


(A) P: Open Circuit, Q: Short Circuit, R: Matched Load
(B) P: Open Circuit, Q: Matched Load, R: Short Circuit
(C) P: Short Circuit, Q: Matched Load, R: Open Circuit
(D) P: Short Circuit, Q: Open Circuit, R: Matched Load

Official answer: **C**

**SOLUTION**

1. On a normalized impedance Smith chart, each point is a value of the reflection coefficient $\Gamma=\dfrac{z-1}{z+1}$, where $z=Z_L/Z_0=r+jx$. The chart centre is $\Gamma=0$, and the horizontal diameter is the real axis of $\Gamma$ (the line $x=0$), running from $\Gamma=-1$ on the left to $\Gamma=+1$ on the right.
2. Point $P$ (leftmost end of the real axis): $\Gamma=-1$. Solving $\dfrac{z-1}{z+1}=-1$ gives $z-1=-z-1$, so $z=0$ and $Z_L=0$: a **short circuit**. You can also read it off the chart: $P$ lies on the outer circle, which is the $r=0$ circle, and on the real axis, where $x=0$, so $z=0+j0$.
3. Point $Q$ (centre of the chart): $\Gamma=0$. Then $z-1=0$, so $z=1+j0$ and $Z_L=Z_0$: a **matched load**. The $r=1$ circle drawn in the figure passes through this point, and it lies on the real axis ($x=0$).
4. Point $R$ (rightmost end of the real axis): $\Gamma=+1$. The equation $\dfrac{z-1}{z+1}=1$ would need $z-1=z+1$, which no finite $z$ satisfies; $\Gamma\to 1$ only as $z\to\infty$, so $Z_L\to\infty$: an **open circuit**. On the chart, every constant-$r$ circle and every constant-$x$ arc (including the $r=1$ circle and the $x=\pm1$ arcs drawn here) passes through this point, which is the limit $r\to\infty$.

5. So $P$ is a short circuit, $Q$ is a matched load and $R$ is an open circuit, which is option (C).

**KEY IDEA**

A point on the impedance Smith chart is the reflection coefficient $\Gamma = \dfrac{z-1}{z+1}$. The centre ($\Gamma = 0$) is the matched load $z = 1$. The left end of the real axis ( $\Gamma = -1$) is $z = 0$, a short circuit. The right end ( $\Gamma = +1$), where every $r$ circle and $x$ arc meets, is $z \to \infty$, an open circuit.

**WATCH OUT FOR**

Reading the chart as an admittance (Y) Smith chart. That chart is the impedance chart rotated by $180°$, so its left end is the open circuit and its right end the short circuit, which leads to option (B). The question says it is a normalized impedance chart, so short circuit is on the left and open circuit on the right. A second slip is calling the centre a short or open circuit: the centre is $\Gamma = 0$, which means no reflection, so it is the matched load.

## Q.11 MCQ · 1 MARK

Engineering Mathematics › Linear algebra

Let $\mathbf{M}$ be a real $4 \times 4$ matrix. Consider the following statements:

S1: $\mathbf{M}$ has 4 linearly independent eigenvectors.

S2: $\mathbf{M}$ has 4 distinct eigenvalues.

S3: $\mathbf{M}$ is non-singular (invertible).

Which one among the following is TRUE?

**(A)** S1 implies S2

**(B)** S1 implies S3

**(C)** S2 implies S1

**(D)** S3 implies S2

Official answer: **C**

**SOLUTION**

1. **Theorem used:** eigenvectors that belong to distinct eigenvalues are linearly independent. Suppose $\mathbf{M}$ has 4 distinct eigenvalues $\lambda_1, \ldots, \lambda_4$ and we pick one eigenvector for each. By the theorem these 4 eigenvectors are linearly independent, so S2 $\Rightarrow$ S1 and option (C) holds. (For a real matrix some of the $\lambda_i$ may be complex. The theorem still applies, with the eigenvectors in $\mathbb{C}^4$.)
2. **(A) is false.** Take $\mathbf{M} = I_4$. Every nonzero vector is an eigenvector, so the 4 standard basis vectors are 4 linearly independent eigenvectors and S1 holds. But the only eigenvalue is $\lambda = 1$, repeated 4 times, so S2 fails.
3. **(B) is false.** Take $\mathbf{M} = \mathbf{0}_{4\times4}$. The 4 standard basis vectors are linearly independent eigenvectors, all with $\lambda = 0$, so S1 holds. But $\det \mathbf{M} = 0$, so $\mathbf{M}$ is singular and S3 fails.
4. **(D) is false.** $\mathbf{M} = I_4$ is invertible because $\det I_4 = 1 \neq 0$, so S3 holds. Its eigenvalues $1, 1, 1, 1$ are not distinct, so S2 fails.
5. **How S3 relates to the eigenvalues:** $\det \mathbf{M} = \lambda_1\lambda_2\lambda_3\lambda_4$, with eigenvalues counted by multiplicity. Invertibility therefore only says that no eigenvalue is zero. It says nothing about whether the eigenvalues are distinct or whether $\mathbf{M}$ is diagonalisable, and diagonalisability says nothing about invertibility.
6. Only (C) survives, and it holds for every matrix, not just for one example: distinct eigenvalues are sufficient (though not necessary) for $\mathbf{M}$ to be diagonalisable. **Answer: (C)**

**KEY IDEA**

Eigenvectors for distinct eigenvalues are always linearly independent, so distinct eigenvalues are enough for diagonalisability. To knock out the other three options, one counterexample each is enough. $I_4$ shows that repeated eigenvalues can still come with a full set of eigenvectors, and that an invertible matrix can have repeated eigenvalues. $\mathbf{0}$ shows that a full set of eigenvectors does not make a matrix invertible.

**WATCH OUT FOR**

Many students read the implication backwards and pick (A), treating "diagonalisable" as if it meant "distinct eigenvalues". $I_4$ is diagonalisable but has one eigenvalue repeated four times. Others mix up diagonalisability with invertibility and pick (B). These are unrelated properties: the zero matrix is diagonalisable (it is already diagonal) but singular.

## Q.12 MCQ · 1 MARK

Engineering Mathematics › Calculus

Let $f(x,y)=\dfrac{ax^2+by^2}{xy}$, where $a$ and $b$ are constants. If $\dfrac{\partial f}{\partial x}=\dfrac{\partial f}{\partial y}$ at $x=1$ and $y=2$, then the relation between $a$ and $b$ is

**(A)** $a=\dfrac{b}{4}$

**(B)** $a=\dfrac{b}{2}$

**(C)** $a=2b$

**(D)** $a=4b$

Official answer: **D**

**SOLUTION**

1. Split the fraction before differentiating: $f(x,y)=\dfrac{ax^2+by^2}{xy}=a\,\dfrac{x}{y}+b\,\dfrac{y}{x}$.
2. Differentiate with respect to $x$, holding $y$ constant: $\dfrac{\partial f}{\partial x}=\dfrac{a}{y}-\dfrac{by}{x^2}$.
3. Differentiate with respect to $y$, holding $x$ constant: $\dfrac{\partial f}{\partial y}=-\dfrac{ax}{y^2}+\dfrac{b}{x}$.
4. Substitute $x=1,\ y=2$: $\dfrac{\partial f}{\partial x}=\dfrac{a}{2}-2b$ and $\dfrac{\partial f}{\partial y}=-\dfrac{a}{4}+b$.
5. Set the two equal:
$$\frac{a}{2}-2b=-\frac{a}{4}+b\ \Rightarrow\ \frac{3a}{4}=3b\ \Rightarrow\ a=4b$$
6. Check: take $b=1,\ a=4$. Then $\dfrac{\partial f}{\partial x}=2-2=0$ and $\dfrac{\partial f}{\partial y}=-1+1=0$, so the two are equal. The answer is option (D).

**KEY IDEA**

Write $f$ as $a\,\dfrac{x}{y}+b\,\dfrac{y}{x}$ first. Each term is then a simple power of $x$ or $y$, so both partial derivatives take one line each and you never need the quotient rule. Put in the point, set the two derivatives equal and solve the linear equation for $a$ in terms of $b$.

**WATCH OUT FOR**

The usual slip is a sign or power when using the quotient rule on the whole fraction. For example, writing $\dfrac{\partial}{\partial x}\left(\dfrac{by}{x}\right)=\dfrac{by}{x^2}$ without the minus sign gives $\dfrac{a}{2}+2b=-\dfrac{a}{4}+b$, which leads to $a=-\dfrac{4b}{3}$, and that matches no option. Swapping which variable is held constant (treating $\dfrac{ax}{y}$ as $a$ times $\dfrac{1}{y}$ when differentiating in $x$) produces the distractors $a=\dfrac{b}{4}$ or $a=\dfrac{b}{2}$.

## Q.13 MCQ · 1 MARK

Signals and Systems › z-transform

A discrete-time all-pass system has two of its poles at $0.25\angle 0^\circ$ and $2\angle 30^\circ$. Which one of the following statements about the system is TRUE?

**(A)** It has two more poles at $0.5\angle 30^\circ$ and $4\angle 0^\circ$.

**(B)** It is stable only when the impulse response is two-sided.

**(C)** It has constant phase response over all frequencies.

**(D)** It has constant phase response over the entire $z$-plane.

Official answer: **B**

**SOLUTION**

1. All-pass pole-zero rule: for $|H(e^{j\omega})|$ to be constant, every pole at $p$ must have a paired zero at the conjugate-reciprocal point $1/p^*$. The zero has the same angle as the pole and the reciprocal radius.
2. Pole $0.25\angle 0^\circ$ pairs with a zero at $\frac{1}{0.25}\angle 0^\circ = 4\angle 0^\circ$. Pole $2\angle 30^\circ$ pairs with a zero at $\frac{1}{2}\angle 30^\circ = 0.5\angle 30^\circ$.
3. So $4\angle 0^\circ$ and $0.5\angle 30^\circ$ are **zeros**, not poles. Option (A) is false.
4. ROC and stability: an LTI system is stable exactly when the ROC of $H(z)$ contains the unit circle $|z| = 1$. The ROC is a ring bounded by pole radii and contains no poles. Here one pole has radius $0.25$ (inside the unit circle) and one has radius $2$ (outside).
5. A right-sided $h[n]$ has ROC $|z| > r_{\max}$, where $r_{\max} \geq 2$ is the largest pole radius, so it cannot contain $|z| = 1$. A left-sided $h[n]$ has ROC $|z| < r_{\min}$, where $r_{\min} \leq 0.25$, so it cannot contain $|z| = 1$ either. The only ROC that can contain the unit circle is an annulus lying between the pole at radius $0.25$ and the pole at radius $2$ (for the two given poles, $0.25 < |z| < 2$).
6. An annular ROC means the impulse response is two-sided. So the system is stable only when $h[n]$ is two-sided. Option (B) is true.
7. An all-pass system has constant **magnitude**, not constant phase. If the phase were constant as well, $H(e^{j\omega})$ would be one fixed complex number $K$ for every $\omega$. Then $h[n] = K\,\delta[n]$, which has no poles, but this system is given to have poles. So the phase varies with $\omega$ and (C) is false.
8. (D) is false for the same reason. $H(z)$ is a non-constant rational function (it has poles and zeros), so its angle changes from point to point in the $z$-plane, and it is not even defined at the zeros $4\angle 0^\circ$ and $0.5\angle 30^\circ$.
9. Answer: (B).

**KEY IDEA**

In an all-pass system every pole $p$ has a zero at $1/p^*$. Stability needs the ROC to contain $|z| = 1$. With one pole inside the unit circle ($0.25$) and one outside ($2$), the only ROC that can do that is an annulus, so $h[n]$ must be two-sided.

**WATCH OUT FOR**

Picking (A) by treating the conjugate-reciprocal points $4\angle 0^\circ$ and $0.5\angle 30^\circ$ as poles, when an all-pass filter places ZEROS there. Picking (C) by confusing the all-pass property (constant magnitude) with constant phase. Also assuming a stable system must be causal: a pole outside the unit circle forces a stable system to be non-causal and two-sided.

## Q.14 MCQ · 1 MARK

Signals and Systems › Fourier series

Let $x(t)$ be a periodic function with period $T = 10$. The Fourier series coefficients for this series are denoted by $a_k$, that is

$$x(t) = \sum_{k=-\infty}^{\infty} a_k\, e^{jk\frac{2\pi}{T}t}$$

The same function $x(t)$ can also be considered as a periodic function with period $T' = 40$. Let $b_k$ be the Fourier series coefficients when period is taken as $T'$. If $\sum_{k=-\infty}^{\infty} |a_k| = 16$, then $\sum_{k=-\infty}^{\infty} |b_k|$ is equal to

**(A)** 256

**(B)** 64

**(C)** 16

**(D)** 4

Official answer: **C**

**SOLUTION**

1. **Fundamental frequencies.** With $T = 10$: $\omega_0 = \dfrac{2\pi}{10}$. With $T' = 40$: $\omega_0' = \dfrac{2\pi}{40} = \dfrac{\omega_0}{4}$. Taking $T' = 40$ is legitimate because $40 = 4 \times 10$ is a multiple of the period, so $x(t + 40) = x(t)$.
2. **Rewrite the given series on the new base frequency.** Since $\omega_0 = 4\omega_0'$,
$$x(t) = \sum_{k=-\infty}^{\infty} a_k \, e^{jk\omega_0 t} = \sum_{k=-\infty}^{\infty} a_k \, e^{j(4k)\omega_0' t}$$
3. **Compare with the $T'$ series.** By definition $x(t) = \sum_{m=-\infty}^{\infty} b_m \, e^{jm\omega_0' t}$. Fourier series coefficients over a given period are unique (and the series converges absolutely here, because $\sum |a_k| = 16$ is finite), so matching the exponentials term by term gives
$$b_m = \begin{cases} a_{m/4}, & m = 0, \pm 4, \pm 8, \ldots \\ 0, & \text{otherwise} \end{cases}$$
4. **Check by direct integration (optional).** $b_m = \dfrac{1}{40} \int_0^{40} x(t) \, e^{-jm\frac{2\pi}{40} t} \, dt$. Split $[0, 40]$ into the four intervals $[10n, 10n + 10]$, $n = 0, 1, 2, 3$, and put $t = \tau + 10n$. Since $x(\tau + 10n) = x(\tau)$ and $e^{-jm\frac{2\pi}{40}(10n)} = e^{-jm\pi n/2}$,
$$b_m = \frac{1}{40} \left( \sum_{n=0}^{3} e^{-jm\pi n/2} \right) \int_0^{10} x(\tau) \, e^{-jm\frac{2\pi}{40}\tau} \, d\tau$$
The bracket equals $4$ when $m$ is a multiple of $4$. Otherwise $e^{-jm\pi/2} \neq 1$, and the geometric sum is $\dfrac{1 - e^{-j2\pi m}}{1 - e^{-jm\pi/2}} = 0$. For $m = 4k$:
$$b_{4k} = \frac{4}{40} \int_0^{10} x(\tau) \, e^{-jk\frac{2\pi}{10}\tau} \, d\tau = \frac{1}{10} \int_0^{10} x(\tau) \, e^{-jk\frac{2\pi}{10}\tau} \, d\tau = a_k$$
5. **Sum of magnitudes.** The nonzero $b_m$ are exactly the $a_k$, moved to the indices $m = 4k$. Every other $b_m$ is zero. Hence
$$\sum_{m=-\infty}^{\infty} |b_m| = \sum_{k=-\infty}^{\infty} |a_k| = 16$$
6. Hence the answer is **(C) 16**.

**KEY IDEA**

The signal and its spectrum do not change when you choose a longer period. With $T' = 4T$ the new fundamental is $\omega_0/4$. The original harmonics sit at every 4th index of the new series, so $b_{4k} = a_k$ and the three indices in between are zero. The nonzero coefficients keep their values, so any sum over them, including $\sum |b_k|$, stays the same.

**WATCH OUT FOR**

Scaling the coefficients by the period ratio. Seeing $\frac{1}{T'} = \frac{1}{40}$ in place of $\frac{1}{10}$ and dividing by 4 gives (D) 4. Thinking there are 4 times as many coefficients and multiplying gives (B) 64, and squaring gives (A) 256. Both errors forget two things. First, the integral over $T' = 40$ covers four copies of the period, and that cancels the extra $\frac{1}{4}$. Second, the new in-between coefficients are exactly zero. This is not a time-scaling of $x(t)$: the function itself is unchanged.

## Q.15 NAT · 1 MARK

Communications › Analog modulation

Consider the following amplitude modulated signal: $s(t) = \cos(2000\pi t) + 4\cos(2400\pi t) + \cos(2800\pi t)$. The ratio (accurate to three decimal places) of the power of the message signal to the power of the carrier signal is _____.

Official answer: **0.12 to 0.13**

**SOLUTION**

1. Convert the angular frequencies to Hz: $2000\pi,\ 2400\pi,\ 2800\pi$ rad/s are $1000,\ 1200,\ 1400$ Hz. The middle component is the carrier, with $f_c = 1200$ Hz and amplitude $A_c = 4$. The outer two are the lower and upper sidebands at $f_c \mp 200$ Hz.
2. Combine the sidebands: $\cos(2000\pi t) + \cos(2800\pi t) = 2\cos(2400\pi t)\cos(400\pi t)$.
3. Then $s(t) = 4\cos(2400\pi t)\left[1 + \frac{1}{2}\cos(400\pi t)\right] = A_c\left[1 + m(t)\right]\cos(2\pi f_c t)$, with $A_c = 4$ and $m(t) = 0.5\cos(400\pi t)$. This is single-tone AM with $f_m = 200$ Hz and modulation index $\mu = 0.5$.
4. Carrier power: $P_c = \frac{A_c^2}{2} = \frac{16}{2} = 8$.
5. Power in the message-dependent part (the two sidebands): $P_{SB} = \frac{1^2}{2} + \frac{1^2}{2} = 1$. Check: $P_c\,\mu^2/2 = 8 \times 0.25/2 = 1$.
6. Ratio: $\frac{P_{SB}}{P_c} = \frac{1}{8} = 0.125$. The same value comes from the message $m(t)$ itself, since its power is $\frac{0.5^2}{2} = 0.125$ relative to a unit-amplitude carrier term.

**KEY IDEA**

Combine the two equal outer cosines into $2\cos(\omega_c t)\cos(\omega_m t)$ to put the signal in the form $A_c[1 + \mu\cos\omega_m t]\cos\omega_c t$. Then the sideband-to-carrier power ratio is $\mu^2/2$.

**WATCH OUT FOR**

Taking the carrier to be the component at 1000 Hz or 1400 Hz, or using $\mu = 1/4$ by dividing the sideband amplitude 1 by the carrier amplitude 4 without noting that there are two sidebands. The correct value is $\mu = 2 \times 1/4 = 0.5$.

## Q.16 NAT · 1 MARK

Communications › Error control

Consider a binary channel code in which each codeword has a fixed length of 5 bits. The Hamming distance between any pair of distinct codewords in this code is at least 2. The maximum number of codewords such a code can contain is _____.

Official answer: **16**

**SOLUTION**

1. We need the largest binary code of length $n = 5$ with minimum Hamming distance $d_{\min} \geq 2$.

2. Upper bound: delete the last bit of every codeword. Two distinct codewords differ in at least 2 positions, so after deleting one position they still differ in at least $2 - 1 = 1$ position. The shortened 4-bit words are therefore all distinct.
3. There are only $2^4 = 16$ binary words of length 4, so the number of codewords satisfies $M \leq 16$.
4. Achievability: take all 5-bit words of even weight (the single parity-check code). Two different even-weight words differ in an even number of positions, and in at least one, so in at least 2. Hence $d_{\min} \geq 2$.
5. The number of even-weight words of length 5 is $\binom{5}{0} + \binom{5}{2} + \binom{5}{4} = 1 + 10 + 5 = 16$.
6. The upper bound is met, so the maximum number of codewords is $2^{n-1} = 2^4 = 16$.

**KEY IDEA**

A minimum distance of 2 means the code detects single-bit errors. Deleting one coordinate keeps all codewords distinct, so the size is at most $2^{n-1}$, and the even-parity code reaches that bound.

**WATCH OUT FOR**

Using the Hamming bound or the Singleton bound incorrectly, or picking 32 because 5 bits give 32 words. Distance 2 forbids two codewords from differing in only one bit, so only half the words can be used.

## Q.17 NAT · 1 MARK

Communications › Digital communication

Q.17 A binary source generates symbols $X \in \{-1,1\}$ which are transmitted over a noisy channel. The probability of transmitting $X = 1$ is 0.5. Input to the threshold detector is $R = X + N$. The probability density function $f_N(n)$ of the noise $N$ is shown below.

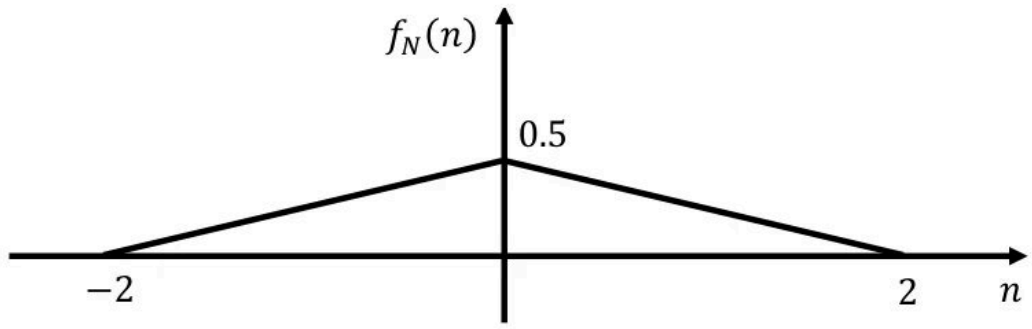


If the detection threshold is zero, then the probability of error (correct to two decimal places) is _____.

Official answer: **0.12 to 0.14**

**SOLUTION**

1. The noise pdf is a symmetric triangle on $-2 \leq n \leq 2$ with peak $0.5$ at $n = 0$. Its area is $\frac{1}{2} \cdot 4 \cdot 0.5 = 1$, so it is a valid pdf.
2. The two sides are $f_N(n) = 0.25\,(n + 2)$ for $-2 \leq n \leq 0$ and $f_N(n) = 0.25\,(2 - n)$ for $0 \leq n \leq 2$.
3. With threshold 0, the detector decides $\hat{X} = 1$ if $R \geq 0$ and $\hat{X} = -1$ if $R < 0$.
4. If $X = 1$, then $R = 1 + N$ and an error occurs when $R < 0$, that is $N < -1$. If $X = -1$, then $R = -1 + N$ and an error occurs when $R > 0$, that is $N > 1$.
5. $$P(N < -1) = \int_{-2}^{-1} 0.25\,(n + 2)\,dn = 0.25\left[\frac{(n+2)^2}{2}\right]_{-2}^{-1} = 0.25 \cdot \frac{1}{2} = 0.125$$
   This is also the area of the small triangle with base 1 and height 0.25.
6. The pdf is symmetric about $n = 0$, so $P(N > 1) = 0.125$.
7. $$P_e = 0.5\,(0.125) + 0.5\,(0.125) = 0.125 \approx 0.13$$

**KEY IDEA**
With a zero threshold, an error needs the noise to push the received sample across zero. For $X = 1$ that means $N < -1$, and for $X = -1$ it means $N > 1$. Each tail probability is the area of a small triangle under the noise pdf.

**WATCH OUT FOR**
Using the Gaussian $Q(\cdot)$ formula, or integrating from the signal level $\pm 1$ out to $\pm 2$ incorrectly. Another slip is taking the tail height at $n = \pm 1$ as $0.5$ instead of $0.25$, which gives $0.25$ for the tail area.

## Q.18 NAT · 1 MARK

Electronic Devices › P-N junction

A p-n step junction diode with a contact potential of $0.65\ \text{V}$ has a depletion width of $1\ \mu\text{m}$ at equilibrium. The forward voltage (in volts, correct to two decimal places) at which this width reduces to $0.6\ \mu\text{m}$ is _____.

Official answer: **0.40 to 0.43**

**SOLUTION**

1. For a p-n step junction, the depletion width satisfies $W \propto \sqrt{V_{bi} - V}$, where $V$ is the forward bias voltage (taken positive, since forward bias lowers the barrier potential and thus shrinks the depletion width).
2. At equilibrium ($V = 0$): $W_0 = k\sqrt{V_{bi}} = 1\ \mu\text{m}$, with $V_{bi} = 0.65\ \text{V}$.
3. At forward bias $V$: $W = k\sqrt{V_{bi} - V} = 0.6\ \mu\text{m}$.
4. Dividing the two relations eliminates the constant $k$:
$$\left(\frac{W}{W_0}\right)^2 = \frac{V_{bi} - V}{V_{bi}} \quad \Rightarrow \quad \left(\frac{0.6}{1}\right)^2 = \frac{0.65 - V}{0.65}$$
5. So $0.36 = \dfrac{0.65 - V}{0.65} \Rightarrow 0.65 - V = 0.36 \times 0.65 = 0.234\ \text{V}$.
6. Therefore $V = 0.65 - 0.234 = 0.416\ \text{V} \approx 0.42\ \text{V}$.

**KEY IDEA**
For a p-n step junction, the depletion width scales with the square root of the effective barrier potential: $W \propto \sqrt{V_{bi} - V}$, where $V$ is the applied forward bias (taken positive, since forward bias reduces the barrier and hence the width). Equating the ratio of widths at two bias points eliminates the proportionality constant and the junction's physical parameters entirely.

**WATCH OUT FOR**
Treating the forward-bias case with the wrong sign, i.e. writing $W \propto \sqrt{V_{bi} + V}$ instead of $\sqrt{V_{bi} - V}$: forward bias lowers the built-in barrier, so the depletion width shrinks, not grows, with increasing forward voltage.

## Q.19 NAT · 1 MARK

Digital Electronics › Sequential

A traffic signal cycles from GREEN to YELLOW, YELLOW to RED and RED to GREEN. In each cycle, GREEN is turned on for 70 seconds, YELLOW is turned on for 5 seconds and the RED is turned on for 75 seconds. This traffic light has to be implemented using a finite state machine (FSM). The only input to this FSM is a clock of 5 second period. The minimum number of flip-flops required to implement this FSM is _____.

Official answer: **5**

**SOLUTION**

1. The FSM's only input is a clock with a 5 s period, so the only way it can keep time is by counting clock edges. It can change state only on a clock edge. All three durations (70 s, 5 s, 75 s) are multiples of 5 s, so every light change falls on a clock edge.
2. Length of one full cycle: $T = 70 + 5 + 75 = 150\ \text{s}$.

3. Clock periods in one cycle: $N = \dfrac{150\ \text{s}}{5\ \text{s}} = 30$. GREEN lasts $70/5 = 14$ periods, YELLOW $5/5 = 1$ period and RED $75/5 = 15$ periods.
4. Why the machine needs at least 30 states: with no input other than the clock, the next state depends only on the present state. After at most $k$ clock periods (for a $k$-state machine) some state repeats, and from then on the sequence of states repeats. The light pattern (14 GREEN, 1 YELLOW, 15 RED) repeats only every 30 periods and never sooner, so the repeating loop of states must be at least 30 states long. Two states in the same colour cannot be merged, because the machine has to know how many 5 s periods have passed to switch after the 14th GREEN or the 15th RED period.
5. $n$ flip-flops give at most $2^n$ distinct states, so we need the smallest $n$ with $2^n \geq 30$:
$$2^4 = 16 < 30 \leq 32 = 2^5 \ \Rightarrow\ n = \lceil \log_2 30 \rceil = 5$$
6. Five flip-flops are enough: build a mod-30 counter (30 of the 32 codes used) and decode the light outputs from the count (GREEN for counts 0 to 13, YELLOW for 14, RED for 15 to 29). So the minimum number of flip-flops is **5**.

**KEY IDEA**

With only a clock as input, the FSM can keep time only by counting clock periods. Its state loop must be as long as the full light cycle measured in clock periods: $150/5 = 30$ states. $n$ flip-flops give $2^n$ states, so $n = \lceil \log_2 30 \rceil = 5$.

**WATCH OUT FOR**

Counting only the three colours as three states, which gives 2 flip-flops. That machine cannot hold GREEN for 14 clock periods and RED for 15, because it has no input telling it when to move on. A second mistake is to size for the longest phase alone (15 states, 4 flip-flops) and forget that the count must cover the whole 150 s cycle.

## Q.20 NAT · 1 MARK

Q.20 There are two photolithography systems: one with light source of wavelength $\lambda_1 = 156$ nm (System 1) and another with light source of wavelength $\lambda_2 = 325$ nm (System 2). Both photolithography systems are otherwise identical. If the minimum feature sizes that can be realized using System1 and System2 are $L_{min1}$ and $L_{min2}$ respectively, the ratio $L_{min1}/L_{min2}$ (correct to two decimal places) is_____.

Official answer: **0.47 to 0.51**

## Q.21 NAT · 1 MARK

Electromagnetics › Transmission lines

A lossy transmission line has resistance per unit length $R = 0.05\ \Omega/\text{m}$. The line is distortionless and has characteristic impedance of $50\ \Omega$. The attenuation constant (in Np/m, correct to three decimal places) of the line is _____.

Official answer: **0.001**

**SOLUTION**

1. **Distortionless (Heaviside) condition:** $\dfrac{R}{L} = \dfrac{G}{C}$, which is the same as $RC = LG$.
2. Write $R + j\omega L = L\left(\dfrac{R}{L} + j\omega\right)$ and $G + j\omega C = C\left(\dfrac{G}{C} + j\omega\right)$. The brackets are equal under the distortionless condition, so the characteristic impedance is purely real: $Z_0 = \sqrt{\dfrac{R + j\omega L}{G + j\omega C}} = \sqrt{\dfrac{L}{C}} = \sqrt{\dfrac{R}{G}}$.

3. The same factorisation gives the propagation constant: $\gamma = \sqrt{(R + j\omega L)(G + j\omega C)} = \sqrt{LC}\left(\frac{R}{L} + j\omega\right) = \sqrt{RG} + j\omega\sqrt{LC}$. So $\alpha = \sqrt{RG}$, which does not depend on frequency.
4. From $Z_0 = \sqrt{R/G}$ we get $G = \frac{R}{Z_0^2}$. Substituting, $\alpha = \sqrt{R \cdot \frac{R}{Z_0^2}} = \frac{R}{Z_0}$.
5. $$\alpha = \frac{R}{Z_0} = \frac{0.05}{50} = 0.001 \text{ Np/m}$$
6. Check: $G = \frac{R}{Z_0^2} = \frac{0.05}{2500} = 2 \times 10^{-5}$ S/m, and $\sqrt{RG} = \sqrt{0.05 \times 2 \times 10^{-5}} = \sqrt{10^{-6}} = 10^{-3}$ Np/m.

**KEY IDEA**

On a distortionless line ($R/L = G/C$), $Z_0 = \sqrt{L/C} = \sqrt{R/G}$ is purely real and $\alpha = \sqrt{RG}$. Eliminating $G$ gives $\alpha = R/Z_0$ (equivalently $\alpha = GZ_0$), so only $R$ and $Z_0$ are needed.

**WATCH OUT FOR**

Using the low-loss formula $\alpha = \frac{R}{2Z_0} + \frac{GZ_0}{2}$ but keeping only the $R$ term gives $0.0005$. On a distortionless line the $G$ term is not negligible: $GZ_0 = R/Z_0$, so the two halves are equal and add up to $R/Z_0 = 0.001$. Another slip is to say $\alpha$ cannot be found because $G$, $L$ and $C$ are not given, when the distortionless condition fixes $G = R/Z_0^2$.

## Q.22 NAT · 1 MARK

Engineering Mathematics › Linear algebra

Consider matrix $\mathbf{A} = \begin{bmatrix} k & 2k \\ k^2 - k & k^2 \end{bmatrix}$ and vector $\mathbf{x} = \begin{bmatrix} x_1 \\ x_2 \end{bmatrix}$. The number of distinct real values of $k$ for which the equation $\mathbf{Ax} = \mathbf{0}$ has infinitely many solutions is _____.

Official answer: **2**

**SOLUTION**

1. A homogeneous system $\mathbf{Ax} = \mathbf{0}$ always has the trivial solution $\mathbf{x} = \mathbf{0}$. It has infinitely many solutions exactly when $\text{rank}(\mathbf{A}) < 2$ (the number of unknowns). For a square matrix this is the condition $\det \mathbf{A} = 0$.
2. Expand the $2 \times 2$ determinant:
$$\det \mathbf{A} = k \cdot k^2 - 2k\,(k^2 - k) = k^3 - 2k^3 + 2k^2 = -k^3 + 2k^2.$$
3. Factorise: $\det \mathbf{A} = k^2(2 - k)$.
4. Set $\det \mathbf{A} = 0$: $k^2(2 - k) = 0 \Rightarrow k = 0$ (a double root) or $k = 2$. Both are real.
5. Check $k = 0$: $\mathbf{A} = \begin{bmatrix} 0 & 0 \\ 0 & 0 \end{bmatrix}$, rank $0$, so every $\mathbf{x}$ is a solution. Infinitely many solutions.
6. Check $k = 2$: $\mathbf{A} = \begin{bmatrix} 2 & 4 \\ 4 - 2 & 4 \end{bmatrix} = \begin{bmatrix} 2 & 4 \\ 2 & 4 \end{bmatrix}$, rank $1$, so the system reduces to $x_1 + 2x_2 = 0$, i.e. $x_1 = -2x_2$ with $x_2$ free. A one-parameter family of solutions.
7. The root $k = 0$ is repeated, but it is still only one value of $k$. The distinct real values are $k = 0$ and $k = 2$, so the count is $2$.

**KEY IDEA**

A homogeneous square system $\mathbf{Ax} = \mathbf{0}$ has non-trivial (and so infinitely many) solutions exactly when $\det \mathbf{A} = 0$. Find the real roots of $\det \mathbf{A}$ as a polynomial in $k$ and count each distinct root once.

**WATCH OUT FOR**

Counting roots with multiplicity: $k^2(2-k) = 0$ has three roots counted with multiplicity $(0, 0, 2)$, which leads some candidates to answer $3$, but the question asks for DISTINCT values, which gives $2$. A second trap is cancelling a factor of $k$ from the determinant, or dividing a row by $k$, which quietly throws away the root $k = 0$ and gives $1$.

## Q.23 NAT · 1 MARK

Engineering Mathematics › Probability & statistics

Let $X_1$, $X_2$, $X_3$ and $X_4$ be independent normal random variables with zero mean and unit variance. The probability that $X_4$ is the smallest among the four is _____.

Official answer: **0.25**

**SOLUTION**

1. The four variables are independent and identically distributed, each $\mathcal{N}(0, 1)$. Their joint density is $\phi(x_1)\phi(x_2)\phi(x_3)\phi(x_4)$, which stays the same if the variables are reordered. So every ordering of $X_1, \ldots, X_4$ is equally likely.
2. Each $X_i$ is continuous, so $P(X_i = X_j) = 0$ for $i \neq j$. With probability 1 exactly one of the four is the smallest.
3. The events $A_i = \{X_i \text{ is the smallest}\}$, $i = 1, \ldots, 4$, are therefore mutually exclusive and exhaustive (up to a probability-zero set of ties):
$$\sum_{i=1}^{4} P(A_i) = 1$$
4. By symmetry (the variables are i.i.d.), each index is equally likely to be the minimum: $P(A_1) = P(A_2) = P(A_3) = P(A_4)$.
5. Hence $4\,P(A_4) = 1 \Rightarrow P(A_4) = \dfrac{1}{4} = 0.25$.
6. Check by integration. Condition on $X_4 = x$. By independence, $X_4$ is the smallest when each of $X_1, X_2, X_3$ exceeds $x$, which has probability $[1 - \Phi(x)]^3$:
$$P(A_4) = \int_{-\infty}^{\infty} \phi(x)\,[1 - \Phi(x)]^3\,dx.$$
Put $u = 1 - \Phi(x)$, so $du = -\phi(x)\,dx$. As $x$ runs from $-\infty$ to $\infty$, $u$ runs from $1$ to $0$:
$$P(A_4) = \int_{1}^{0} u^3\,(-du) = \int_{0}^{1} u^3\,du = \frac{1}{4}.$$
No property specific to the normal distribution was used. The result holds for any four i.i.d. continuous random variables.

**KEY IDEA**

With $n$ i.i.d. continuous random variables, ties have probability zero and every ordering is equally likely. So any given variable is the minimum (or the maximum) with probability $1/n$, whatever the distribution. Here $n = 4$, which gives $1/4$. Zero mean and unit variance play no part in the answer.

**WATCH OUT FOR**

Trying to work with the normal CDF $\Phi$ or normal tables, or thinking the zero mean matters (for example, answering $P(X_4 < 0) = 0.5$ or $(1/2)^3 = 0.125$). Another mistake is to multiply $P(X_4 < X_i) = 1/2$ over the three other variables to get $1/8$. The events $\{X_4 < X_1\}$, $\{X_4 < X_2\}$, $\{X_4 < X_3\}$ all depend on $X_4$, so they are not independent and you cannot simply multiply their probabilities.

## Q.24 NAT · 1 MARK

Engineering Mathematics › Calculus

Taylor series expansion of $f(x) = \int_0^x e^{-\left(\frac{t^2}{2}\right)}\, dt$ around $x = 0$ has the form

$$f(x) = a_0 + a_1 x + a_2 x^2 + \cdots$$

The coefficient $a_2$ (correct to two decimal places) is equal to _____.

Official answer: **-0.01 to 0.01**

**SOLUTION**

1. The Taylor coefficient about $x = 0$ is $a_n = \dfrac{f^{(n)}(0)}{n!}$, so $a_2 = \dfrac{f''(0)}{2!} = \dfrac{f''(0)}{2}$.
2. By the fundamental theorem of calculus (Leibniz rule with a variable upper limit and a constant lower limit), $f'(x) = e^{-x^2/2}$.
3. Differentiate again with the chain rule: $f''(x) = \dfrac{d}{dx}\, e^{-x^2/2} = e^{-x^2/2} \cdot \dfrac{d}{dx}\left(-\dfrac{x^2}{2}\right) = -x\, e^{-x^2/2}$.
4. At $x = 0$: $f''(0) = -0 \cdot e^0 = 0$, so $a_2 = \dfrac{0}{2} = 0$.
5. Check by integrating the series term by term. With $e^u = 1 + u + \dfrac{u^2}{2!} + \cdots$ and $u = -\dfrac{t^2}{2}$: $e^{-t^2/2} = 1 - \dfrac{t^2}{2} + \dfrac{t^4}{8} - \cdots$, so
$$f(x) = \int_0^x \left(1 - \frac{t^2}{2} + \frac{t^4}{8} - \cdots\right) dt = x - \frac{x^3}{6} + \frac{x^5}{40} - \cdots$$
Only odd powers appear, because the integrand is even, which makes $f$ an odd function.
6. So $a_0 = 0$, $a_1 = 1$ and $a_2 = 0$. The answer is $a_2 = 0.00$.

**KEY IDEA**

You never need to evaluate the integral. Differentiate under the variable upper limit to get $f'(x) = e^{-x^2/2}$, then use $a_2 = f''(0)/2$. You can also see it without calculating: the integral of an even function from $0$ to $x$ is an odd function, and an odd function's Maclaurin series has only odd powers. So every even-indexed coefficient, including $a_2$, is zero.

**WATCH OUT FOR**

Stopping at $f'(0) = 1$ and reporting it as $a_2$ is the usual slip, and so is forgetting to divide by 2!. That second error does no harm here only because $f''(0) = 0$. Another mistake is to read the $t^2/2$ in the exponent as a coefficient in the answer, writing $a_2 = -\frac{1}{2}$. That $-\frac{1}{2}$ is the $t^2$ coefficient of the integrand, and integrating moves it to the $x^3$ term of $f$, where it becomes $-\frac{1}{6}$.

## Q.25 NAT · 1 MARK

Networks (Electric Circuits) › Two-port

Q.25 The $ABCD$ matrix for a two-port network is defined by:

$$\begin{bmatrix} V_1 \\ I_1 \end{bmatrix} = \begin{bmatrix} A & B \\ C & D \end{bmatrix} \begin{bmatrix} V_2 \\ -I_2 \end{bmatrix}$$

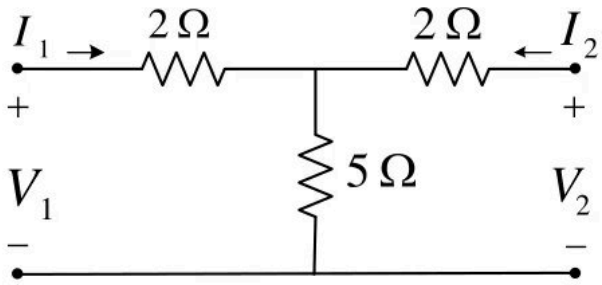


The parameter $B$ for the given two-port network (in ohms, correct to two decimal places) is _____.



Official answer: **4.3 to 5.3**

### SOLUTION

1. **Definition of $B$.** From $V_1 = AV_2 + B(-I_2)$, setting $V_2 = 0$ gives $B = \left.\dfrac{V_1}{-I_2}\right|_{V_2=0}$. So short-circuit port 2 and find the ratio of $V_1$ to the current $-I_2$ that flows out through the short.
2. **Input resistance with port 2 shorted.** With port 2 shorted, the right-hand $2\,\Omega$ runs from the central node to the bottom line, so it sits in parallel with the $5\,\Omega$ shunt: $5 \parallel 2 = \dfrac{5 \times 2}{5+2} = \dfrac{10}{7}\,\Omega$. Hence $R_{in} = 2 + \dfrac{10}{7} = \dfrac{24}{7}\,\Omega$ and $I_1 = \dfrac{V_1}{R_{in}} = \dfrac{7V_1}{24}$.
3. **Current divider at the central node.** $I_1$ splits between the $5\,\Omega$ shunt and the right-hand $2\,\Omega$. The share that goes through the $2\,\Omega$ and out of port 2 through the short is $-I_2 = I_1 \cdot \dfrac{5}{5+2} = \dfrac{7V_1}{24} \cdot \dfrac{5}{7} = \dfrac{5V_1}{24}$.
4. **Compute $B$.**
$$B = \frac{V_1}{-I_2} = \frac{V_1}{5V_1/24} = \frac{24}{5} = 4.80\ \Omega$$
5. **Cross-check with the T-network formula.** For series arms $Z_1$, $Z_2$ and shunt arm $Z_3$, $B = Z_1 + Z_2 + \dfrac{Z_1 Z_2}{Z_3} = 2 + 2 + \dfrac{2 \times 2}{5} = 4.80\ \Omega$. This agrees with the direct calculation.

**KEY IDEA**

$B$ is the transfer resistance $V_1/(-I_2)$ with the output shorted ($V_2 = 0$). With port 2 shorted, find $I_1$ from the input resistance, then use a current divider to get the current through the short. For a T-network, $B = Z_1 + Z_2 + Z_1 Z_2 / Z_3$ gives the answer in one line.

**WATCH OUT FOR**

Taking $B$ to be the input resistance with port 2 shorted, $V_1/I_1 = 24/7 \approx 3.43\ \Omega$, which falls outside the key. $B$ divides $V_1$ by the output short-circuit current $-I_2$, not by $I_1$. Some candidates also open-circuit port 2 (that condition defines $A$ and $C$, not $B$), or get the divider backwards and use $2/7$ in place of $5/7$.

## Q.26 MCQ · 2 MARKS

Analog Electronics › Diode circuits

Q.26 The circuit shown in the figure is used to provide regulated voltage (5 V) across the $1\,\text{k}\Omega$ resistor. Assume that the Zener diode has a constant reverse breakdown voltage for a current range, starting from a minimum required Zener current, $I_{Z\,\min} = 2\,\text{mA}$ to its maximum allowable current. The input voltage $V_I$ may vary by 5% from its nominal value of 6 V. The resistance of the diode in the breakdown region is negligible.

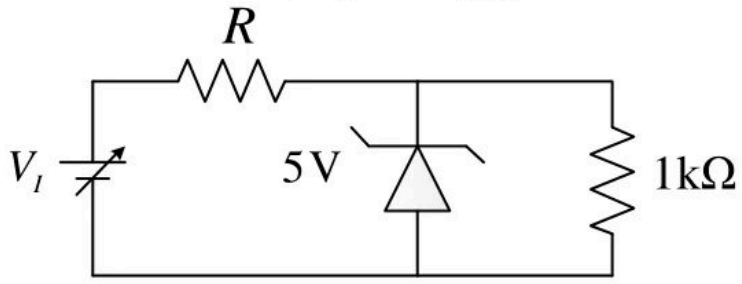


The value of $R$ and the minimum required power dissipation rating of the diode, respectively, are

(A) 186 Ω and 10 mW

(B) 100 Ω and 40 mW

(C) 100 Ω and 10 mW

(D) 186 Ω and 40 mW

Official answer: **B**

**SOLUTION**

1. Assumptions: the Zener is ideal in breakdown ($r_z = 0$), so the output stays at $V_Z = 5\,\text{V}$ for as long as $I_Z \geq I_{Z\,\min} = 2\,\text{mA}$. The load is fixed, so its current is fixed too: $I_L = \dfrac{5\,\text{V}}{1\,\text{k}\Omega} = 5\,\text{mA}$.
2. Input range for a $\pm 5\%$ swing about 6 V: $V_{I\,\min} = 5.7\,\text{V}$ and $V_{I\,\max} = 6.3\,\text{V}$.
3. Choosing $R$: by KCL at the output node, $I_R = I_Z + I_L$. With $I_L$ fixed, $I_Z$ is smallest when $I_R$ is smallest, which happens at $V_{I\,\min}$. Regulation therefore needs $I_R \geq I_{Z\,\min} + I_L = 2 + 5 = 7\,\text{mA}$ at $V_I = 5.7\,\text{V}$.
4. Ohm's law across $R$:
$$R \leq \frac{V_{I\,\min} - V_Z}{I_{Z\,\min} + I_L} = \frac{5.7 - 5}{7\,\text{mA}} = 100\,\Omega$$
A smaller $R$ passes more current and forces a larger diode rating. To keep the rating to a minimum, take the largest $R$ that still regulates: $R = 100\,\Omega$.
5. Maximum Zener current, at $V_{I\,\max}$ with the load unchanged: $I_{R\,\max} = \dfrac{6.3 - 5}{100\,\Omega} = 13\,\text{mA}$, so $I_{Z\,\max} = 13 - 5 = 8\,\text{mA}$.
6. Minimum power rating of the diode: $P_Z = V_Z\, I_{Z\,\max} = 5\,\text{V} \times 8\,\text{mA} = 40\,\text{mW}$.
7. Checking the other options: with $R = 186\,\Omega$, the current at $5.7\,\text{V}$ would be only $I_R = 0.7/186 \approx 3.8\,\text{mA}$. That is less than the $5\,\text{mA}$ the load draws on its own, so the Zener would leave breakdown and regulation would fail. This rules out (A) and (D). With $R = 100\,\Omega$, a $10\,\text{mW}$ rating is exceeded because the diode must dissipate $40\,\text{mW}$, which rules out (C). The answer is $100\,\Omega$ and $40\,\text{mW}$, option (B).

**KEY IDEA**

In a Zener shunt regulator, $R$ is set by the worst case for staying in breakdown: lowest input with maximum load current, where $R_{\max} = \dfrac{V_{I\,\min} - V_Z}{I_{Z\,\min} + I_L}$. The diode's power rating is set by the opposite worst case: highest input with minimum load current, where $P_Z = V_Z\,(I_{R\,\max} - I_{L\,\min})$. Choosing the largest workable $R$ keeps that rating as small as possible.

**WATCH OUT FOR**

Sizing $R$ from the nominal $6\,\text{V}$ or from $V_{I\,\max}$ instead of $V_{I\,\min}$. Another mistake is using $I_{Z\,\min}$ alone and forgetting the $5\,\text{mA}$ load current, for example $0.7/2\,\text{mA}$ or similar, which leads towards $186\,\Omega$. A third is computing the power at $I_{Z\,\min}$ ($5 \times 2 = 10\,\text{mW}$) rather than at the maximum Zener current that flows when $V_I = 6.3\,\text{V}$.

## Q.27 MCQ · 2 MARKS

Communications › Analog modulation

Let $c(t) = A_c \cos(2\pi f_c t)$ and $m(t) = \cos(2\pi f_m t)$. It is given that $f_c \gg 5f_m$. The signal $c(t) + m(t)$ is applied to the input of a non-linear device, whose output $v_o(t)$ is related to the input $v_i(t)$ as $v_o(t) = av_i(t) + bv_i^2(t)$, where $a$ and $b$ are positive constants. The output of the non-linear device is passed through an ideal band-pass filter with center frequency $f_c$ and bandwidth $3f_m$, to produce an amplitude modulated (AM) wave. If it is desired to have the sideband power of the AM wave to be half of the carrier power, then $a/b$ is

**(A)** 0.25

**(B)** 0.5

**(C)** 1

**(D)** 2

Official answer: **D**

**SOLUTION**

1. Let $\omega_c = 2\pi f_c$ and $\omega_m = 2\pi f_m$. The input to the device is $v_i(t) = A_c \cos\omega_c t + \cos\omega_m t$, and $v_o = a\,v_i + b\,v_i^2$.
2. Expand the square: $v_i^2 = A_c^2 \cos^2\omega_c t + \cos^2\omega_m t + 2A_c \cos\omega_c t \cos\omega_m t$.
3. Frequencies present in each term. The linear term $av_i$ has $f_c$ and $f_m$. The term $A_c^2\cos^2\omega_c t$ has DC and $2f_c$. The term $\cos^2\omega_m t$ has DC and $2f_m$. The cross term has $f_c \pm f_m$.
4. The ideal band-pass filter is centred at $f_c$ with bandwidth $3f_m$, so it passes $f_c - 1.5f_m \le f \le f_c + 1.5f_m$. Because $f_c \gg 5f_m$, the components at DC, $f_m$ and $2f_m$ lie far below the pass-band and $2f_c$ lies far above it. They are all rejected. The carrier at $f_c$ and the sidebands at $f_c \pm f_m$ (inside $\pm 1.5f_m$) are passed.
5. Filter output:
$$y(t) = aA_c \cos\omega_c t + 2bA_c \cos\omega_m t \cos\omega_c t = aA_c\left[1 + \frac{2b}{a}\cos\omega_m t\right]\cos\omega_c t.$$
6. This has the standard single-tone AM form $A\,[1 + \mu\cos\omega_m t]\cos\omega_c t$ with modulation index $\mu = \dfrac{2b}{a}$.
7. For single-tone AM, the carrier power is $P_c = \dfrac{A^2}{2}$ and the total sideband power is $P_{sb} = \dfrac{A^2\mu^2}{4}$. Hence $\dfrac{P_{sb}}{P_c} = \dfrac{\mu^2}{2}$.
8. Setting $\dfrac{\mu^2}{2} = \dfrac{1}{2}$ gives $\mu = 1$ (taking the positive value, since $a, b > 0$). Then $\dfrac{2b}{a} = 1$, so $\dfrac{a}{b} = 2$, which is option (D).

**KEY IDEA**

A square-law device turns the sum of a carrier and a message into an AM wave. The carrier-times-message cross term $2bA_c \cos\omega_m t \cos\omega_c t$ supplies the sidebands, so $\mu = 2b/a$. Then use $P_{sb}/P_c = \mu^2/2$.

**WATCH OUT FOR**

Writing the modulation index as $b/a$ or $2b/(aA_c)$ and so missing the factor 2 from the cross term of the square. The amplitude of the message term is 1, so $A_c$ cancels. Another slip is using $\mu^2$ instead of $\mu^2/2$ for the sideband-to-carrier power ratio. A third is forgetting that $f_c \gg 5f_m$ and the filter bandwidth are what remove the unwanted terms.

## Q.28 MCQ · 2 MARKS

Communications › Random processes

Consider a white Gaussian noise process $N(t)$ with two-sided power spectral density $S_N(f) = 0.5$ W/Hz as input to a filter with impulse response $0.5e^{-t^2/2}$ (where $t$ is in seconds) resulting in output $Y(t)$. The power in $Y(t)$ in watts is

**(A)** 0.11

**(B)** 0.22

**(C)** 0.33

**(D)** 0.44

Official answer: **B**

**SOLUTION**

1. The noise is white with two-sided PSD $S_N(f) = \dfrac{N_0}{2} = 0.5\ \text{W/Hz}$. For an LTI filter, $S_Y(f) = S_N(f)\,|H(f)|^2$, so the output power is $P_Y = \displaystyle\int_{-\infty}^{\infty} S_Y(f)\,df$.
2. The Gaussian transform pair, with $f$ in Hz, is $e^{-t^2/2} \leftrightarrow \sqrt{2\pi}\,e^{-2\pi^2 f^2}$.
3. Hence $H(f) = 0.5\sqrt{2\pi}\,e^{-2\pi^2 f^2}$ and $|H(f)|^2 = 0.25 \cdot 2\pi\, e^{-4\pi^2 f^2} = 0.5\pi\, e^{-4\pi^2 f^2}$.
4. The Gaussian integral gives $\displaystyle\int_{-\infty}^{\infty} e^{-4\pi^2 f^2}\,df = \sqrt{\frac{\pi}{4\pi^2}} = \frac{1}{2\sqrt{\pi}}$.
5. $$P_Y = 0.5 \times 0.5\pi \times \frac{1}{2\sqrt{\pi}} = \frac{\sqrt{\pi}}{8} \approx 0.2216\ \text{W}$$
6. Cross-check in the time domain, using Parseval's theorem: $P_Y = \dfrac{N_0}{2}\displaystyle\int_{-\infty}^{\infty} h^2(t)\,dt = 0.5 \times 0.25\int_{-\infty}^{\infty} e^{-t^2}\,dt = 0.5 \times 0.25\sqrt{\pi} = \dfrac{\sqrt{\pi}}{8} \approx 0.2216\ \text{W}$. The two methods agree.
7. The nearest option is $0.22$ W, which is option (B).

**KEY IDEA**

For white noise through an LTI filter, the output power is $\dfrac{N_0}{2}\int h^2(t)\,dt$ (Parseval), where $N_0/2$ is the two-sided PSD. There is no need to find $H(f)$.

**WATCH OUT FOR**

Using the one-sided PSD $N_0 = 0.5$ instead of the two-sided value $N_0/2 = 0.5$ doubles or halves the result. Another slip is forgetting the factor $0.5$ in $h(t)$, which must be squared to give $0.25$. A third is using the wrong Gaussian integral, since $\int e^{-t^2}dt = \sqrt{\pi}$, not $\sqrt{2\pi}$.

## Q.29 MCQ · 2 MARKS

Control Systems › State space

The state equation and the output equation of a control system are given below:

$$\dot{\mathbf{x}} = \begin{bmatrix} -4 & -1.5 \\ 4 & 0 \end{bmatrix} \mathbf{x} + \begin{bmatrix} 2 \\ 0 \end{bmatrix} u,$$

$$y = \begin{bmatrix} 1.5 & 0.625 \end{bmatrix} \mathbf{x}.$$

The transfer function representation of the system is

(A) $\dfrac{3s+5}{s^2+4s+6}$

(B) $\dfrac{3s-1.875}{s^2+4s+6}$

(C) $\dfrac{4s+1.5}{s^2+4s+6}$

(D) $\dfrac{6s+5}{s^2+4s+6}$

Official answer: **A**

**SOLUTION**

1. With no direct feed-through term ($D = 0$), the transfer function is $G(s) = C(sI - A)^{-1}B = \dfrac{C\,\mathrm{adj}(sI - A)\,B}{\det(sI - A)}$.
2. $sI - A = \begin{bmatrix} s+4 & 1.5 \\ -4 & s \end{bmatrix}$, so $\det(sI - A) = s(s+4) - (1.5)(-4) = s^2 + 4s + 6$. This is the characteristic polynomial. All four options have this denominator, so the numerator decides the answer.
3. To get the adjugate of a $2 \times 2$ matrix, swap the diagonal entries and change the sign of the off-diagonal ones: $\mathrm{adj}(sI - A) = \begin{bmatrix} s & -1.5 \\ 4 & s+4 \end{bmatrix}$.
4. $\mathrm{adj}(sI - A)\,B = \begin{bmatrix} s & -1.5 \\ 4 & s+4 \end{bmatrix} \begin{bmatrix} 2 \\ 0 \end{bmatrix} = \begin{bmatrix} 2s \\ 8 \end{bmatrix}$.
5. Numerator: $C \begin{bmatrix} 2s \\ 8 \end{bmatrix} = 1.5(2s) + 0.625(8) = 3s + 5$.
6. $$G(s) = \frac{Y(s)}{U(s)} = \frac{3s+5}{s^2+4s+6}$$
7. Two quick checks. (i) The leading numerator coefficient of a strictly proper second-order $G(s)$ is $CB = 1.5 \times 2 = 3$. That rules out (C), which has 4, and (D), which has 6. (ii) DC gain: $G(0) = -CA^{-1}B$. Here $\det A = 6$ and $A^{-1} = \dfrac{1}{6}\begin{bmatrix} 0 & 1.5 \\ -4 & -4 \end{bmatrix}$, so $A^{-1}B = \begin{bmatrix} 0 \\ -\frac{4}{3} \end{bmatrix}$ and $-CA^{-1}B = 0.625 \times \dfrac{4}{3} = \dfrac{5}{6}$. That matches $G(0) = 5/6$ for (A) and rules out (B), whose $G(0)$ is negative. Only (A) passes both checks.

**KEY IDEA**

For a state model with $D = 0$, $G(s) = C(sI - A)^{-1}B$. The denominator is $\det(sI - A)$. For a $2 \times 2$ system, you get the numerator by multiplying $C\,\mathrm{adj}(sI - A)\,B$. When every option has the same denominator, two shortcuts settle it with no inversion: the $s$-coefficient of the numerator equals $CB$, and the DC gain equals $-CA^{-1}B$.

**WATCH OUT FOR**

Sign errors when forming $sI - A$: the off-diagonal entries flip sign, giving $+1.5$ and $-4$. Sign errors also happen in the adjugate, where the off-diagonal entries are negated. Get either wrong and you end up with a numerator like $3s - 1.875$ (option B). Another mistake is multiplying $C$ and $B$ against $(sI - A)$ instead of its adjugate or inverse. Also note that the DC-gain check alone cannot tell (A) from (D), because both have $G(0) = 5/6$. You also need the leading coefficient $CB = 3$.

## Q.30 MCQ · 2 MARKS

Electronic Devices › Optoelectronics

Q.30 Red (R), Green (G) and Blue (B) Light Emitting Diodes (LEDs) were fabricated using $p$-$n$ junctions of three different inorganic semiconductors having different band-gaps. The built-in voltages of red, green and

blue diodes are $V_R$, $V_G$ and $V_B$, respectively. Assume donor and acceptor doping to be the same ($N_A$ and $N_D$, respectively) in the $p$ and $n$ sides of all the three diodes.

Which one of the following relationships about the built-in voltages is TRUE?

**(A)** $V_R > V_G > V_B$

**(B)** $V_R < V_G < V_B$

**(C)** $V_R = V_G = V_B$

**(D)** $V_R > V_G < V_B$

Official answer: **B**

**SOLUTION**

1. Photon energy (hence LED color) is set by the semiconductor's band-gap $E_g$: among Red, Green and Blue LEDs, $E_{g,B} > E_{g,G} > E_{g,R}$ (blue light carries more energy per photon than red).
2. The built-in voltage of a $p$-$n$ junction is
$$V_{bi} = V_T \ln\left(\frac{N_A N_D}{n_i^2}\right)$$
where $V_T = kT/q$, and $N_A$, $N_D$ are the same for all three diodes (given).
3. The intrinsic carrier concentration depends on the band-gap as
$$n_i^2 \propto \exp\left(-\frac{E_g}{kT}\right)$$
so a larger $E_g$ gives an exponentially smaller $n_i$.
4. Since $N_A N_D$ is fixed, $V_{bi}$ grows as $n_i^2$ shrinks, i.e. $V_{bi}$ increases as $E_g$ increases.
5. Applying the band-gap ordering: $E_{g,B} > E_{g,G} > E_{g,R} \Rightarrow n_{i,B} < n_{i,G} < n_{i,R} \Rightarrow V_{bi,B} > V_{bi,G} > V_{bi,R}$.
6. Hence $V_R < V_G < V_B$, which is option (B).

**KEY IDEA**

A wider band-gap semiconductor has a much smaller intrinsic carrier concentration $n_i$ (since $n_i^2 \propto \exp(-E_g/kT)$), and since $V_{bi} = V_T \ln\left(\frac{N_A N_D}{n_i^2}\right)$ with the same doping in all three diodes, a smaller $n_i$ (larger $E_g$) gives a larger $V_{bi}$.

**WATCH OUT FOR**

Assuming the built-in voltage is unaffected by band-gap because $N_A$ and $N_D$ are stated to be equal (choosing option C), forgetting that $n_i$ itself is exponentially dependent on $E_g$ and enters the same formula.

## Q.31 MCQ · 2 MARKS

Digital Electronics › Combinational

Q.31 A four-variable Boolean function is realized using $4\times1$ multiplexers as shown in the figure.

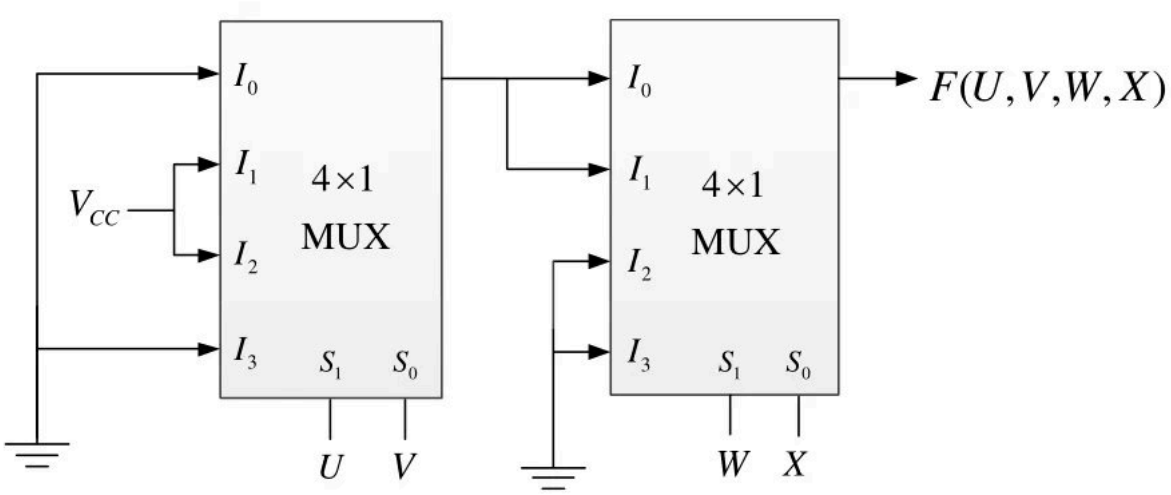


The minimized expression for $F(U,V,W,X)$ is

(A) $(UV+\bar{U}\bar{V})\bar{W}$

(B) $(UV+\bar{U}\bar{V})(\bar{W}\bar{X}+\bar{W}X)$

(C) $(U\bar{V}+\bar{U}V)\bar{W}$

(D) $(U\bar{V}+\bar{U}V)(\bar{W}\bar{X}+\bar{W}X)$

EC 9/17

Official answer: **C**

**SOLUTION**

1. Complement is written with _ throughout. A $4\times1$ MUX with select lines $S_1S_0$ gives $Y=\overline{S_1}\,\overline{S_0}I_0+\overline{S_1}S_0I_1+S_1\overline{S_0}I_2+S_1S_0I_3$.
2. First MUX, with $S_1=U$ and $S_0=V$: the inputs are $I_0=0$ (ground), $I_1=1$ ($V_{CC}$), $I_2=1$ ($V_{CC}$) and $I_3=0$ (ground).
3. Its output is therefore $Y_1=\overline{U}V\cdot1+U\overline{V}\cdot1=\overline{U}V+U\overline{V}=U\oplus V$. It is 1 only for $UV=01$ and $UV=10$.
4. Second MUX, with $S_1=W$ and $S_0=X$: the inputs are $I_0=I_1=Y_1$ and $I_2=I_3=0$ (ground).
5. $$F=\overline{W}\,\overline{X}\,Y_1+\overline{W}X\,Y_1+W\overline{X}\cdot0+WX\cdot0=\overline{W}\,Y_1(\overline{X}+X)=\overline{W}\,Y_1$$
6. So $F=(U\overline{V}+\overline{U}V)\,\overline{W}$. $X$ drops out because it only chooses between two identical inputs, $I_0$ and $I_1$.
7. This matches option (C). Option (D) is the same function but is not minimized, since $\overline{W}\,\overline{X}+\overline{W}X=\overline{W}$. Options (A) and (B) use $UV+\overline{U}\,\overline{V}$, which is XNOR, but the first MUX produces XOR.

**KEY IDEA**

Work through a MUX cascade one stage at a time. The first MUX's data inputs, 0, 1, 1, 0 for $UV=00,01,10,11$, are the truth table of $U\oplus V$. In the second MUX, $I_0=I_1=Y_1$ and $I_2=I_3=0$, so $F=\overline{W}\,Y_1$ and $X$ does not appear in the answer.

**WATCH OUT FOR**

Reading the inputs 0, 1, 1, 0 as XNOR instead of XOR, which gives (A). A second trap is picking (D): it is the correct function, but the question asks for the minimized form, and $\overline{W}\,\overline{X}+\overline{W}X$ reduces to $\overline{W}$.

## Q.32 MCQ · 2 MARKS

Digital Electronics › Processors & memory

Q.32 A $2 \times 2$ ROM array is built with the help of diodes as shown in the circuit below. Here W0 and W1 are signals that select the word lines and B0 and B1 are signals that are output of the sense amps based on the stored data corresponding to the bit lines during the read operation.

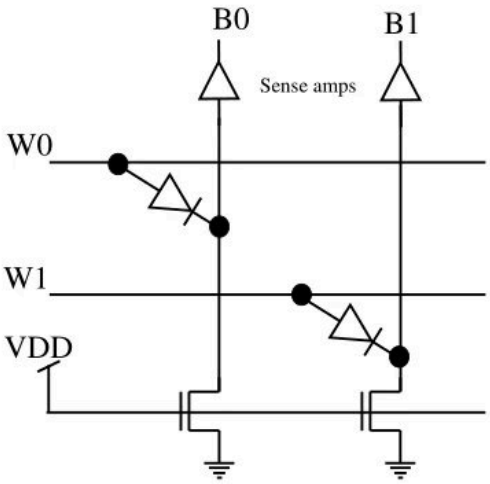


$$\begin{array}{c} \quad B_0 \quad B_1 \\ W_0 \begin{bmatrix} D_{00} & D_{01} \\ D_{10} & D_{11} \end{bmatrix} \\ W_1 \end{array}$$

Bits stored in the ROM Array

During the read operation, the selected word line goes high and the other word line is in a high impedance state. As per the implementation shown in the circuit diagram above, what are the bits corresponding to $D_{ij}$ (where $i = 0$ or 1 and $j = 0$ or 1) stored in the ROM?

(A) $\begin{bmatrix} 1 & 0 \\ 0 & 1 \end{bmatrix}$ (B) $\begin{bmatrix} 0 & 1 \\ 1 & 0 \end{bmatrix}$ (C) $\begin{bmatrix} 1 & 0 \\ 1 & 0 \end{bmatrix}$ (D) $\begin{bmatrix} 1 & 1 \\ 0 & 0 \end{bmatrix}$

Official answer: **A**

**SOLUTION**

1. **Bit-line default.** Each bit line ends in a MOSFET whose source is grounded and whose gate is tied to $V_{DD}$. The symbol has no gate bubble, so it is n-channel, and it is always on. It acts as a pull-down load: if nothing drives a bit line high, the sense amp reads it as $0$.
2. **Diode orientation.** Both diodes have the anode on a word line and the cathode on a bit line. A diode conducts only when its word line is high. It then pulls that bit line up to about one diode drop below the word-line high level, roughly $V_{DD} - V_\gamma$, which the sense amp reads as $1$. So a diode at a crossing stores a $1$ and a crossing with no diode stores a $0$.
3. **Unselected line.** The unselected word line is in a high-impedance state, so it cannot drive any bit line high or low. The diodes conduct only from a word line to a bit line, never back. Each bit line also has only one diode on it, so there is no sneak path through the other row, and only the selected row sets the outputs.
4. **Read row** $W_0$ ($W_0$ high). The diode from $W_0$ to $B_0$ conducts, so $B_0 = 1$. There is no diode at the $W_0$–$B_1$ crossing, so the always-on MOSFET holds $B_1$ low and $B_1 = 0$. This gives $D_{00} = 1$ and $D_{01} = 0$.
5. **Read row** $W_1$ ($W_1$ high). The diode from $W_1$ to $B_1$ conducts, so $B_1 = 1$. There is no diode at the $W_1$–$B_0$ crossing, and the diode on $B_0$ has its anode on the floating line $W_0$, so it cannot conduct. The MOSFET holds $B_0$ low and $B_0 = 0$. This gives $D_{10} = 0$ and $D_{11} = 1$.
6. **Stored matrix:**

$$\begin{bmatrix} D_{00} & D_{01} \\ D_{10} & D_{11} \end{bmatrix} = \begin{bmatrix} 1 & 0 \\ 0 & 1 \end{bmatrix}$$

This is option (A).

**KEY IDEA**

In a diode ROM, the always-on transistor at the foot of each bit line pulls it low by default. A diode from a word line (anode) to a bit line (cathode) pulls that bit line high when the row is selected. So a diode at a crossing stores 1 and an empty crossing stores 0. Read the matrix straight off the diode positions: row $W_0$ has a diode only on $B_0$ and row $W_1$ only on $B_1$.

**WATCH OUT FOR**

Treating a diode as a stored 0, as if it pulled the line low, which gives option (B). Here the default level comes from the pull-down transistor with its gate tied to $V_{DD}$, so a diode drives the line high and marks a 1. A second slip is reading the matrix by column instead of by row, or taking the diode's anode position (the $W_1$ diode's anode sits between $B_0$ and $B_1$) as its column. The column is set by the bit line the cathode lands on.

## Q.33 MCQ · 2 MARKS

Electromagnetics › Plane waves

The distance (in meters) a wave has to propagate in a medium having a skin depth of 0.1 m so that the amplitude of the wave attenuates by 20 dB, is

**(A)** 0.12

**(B)** 0.23

**(C)** 0.46

**(D)** 2.3

Official answer: **B**

**SOLUTION**

1. **Skin depth gives the attenuation constant.** In a lossy medium the field amplitude falls as $e^{-\alpha z}$. The skin depth is the distance over which it falls by a factor of $1/e$, so $\delta = \dfrac{1}{\alpha}$. That gives $\alpha = \dfrac{1}{0.1} = 10\ \text{Np/m}$.
2. **Convert 20 dB to an amplitude ratio.** For amplitude (field) ratios the decibel measure is $20\log_{10}$: $20\log_{10}\dfrac{E_0}{E(z)} = 20 \Rightarrow \dfrac{E_0}{E(z)} = 10$.
3. **Set up the decay.** $e^{-\alpha z} = \dfrac{1}{10} \Rightarrow \alpha z = \ln 10 = 2.303\ \text{Np}$. The same number comes out of the unit conversion: $1\ \text{Np} = 8.686\ \text{dB}$, so $20\ \text{dB} = 20/8.686 = 2.303\ \text{Np}$.
4. **Solve for the distance.**
$$z = \frac{\ln 10}{\alpha} = \delta \ln 10 = 0.1 \times 2.303 = 0.2303\ \text{m}$$
5. **Match the options.** $z \approx 0.23\ \text{m}$, which is option (B).

**KEY IDEA**

Each skin depth multiplies the amplitude by $1/e$, which is an attenuation of 1 Np, or 8.686 dB. A 20 dB amplitude drop means the amplitude falls by a factor of 10. That takes $\ln 10 \approx 2.303$ Np, so the wave must travel $z = \delta \ln 10 = 2.303\,\delta$.

**WATCH OUT FOR**

Treating 20 dB as a power ratio ($10\log_{10}$, a factor of 100) gives $z = \delta \ln 100 = 0.46\ \text{m}$, which is option (C). The skin depth is defined on the field amplitude, so the $20\log_{10}$ form applies. A second error is using $\log_{10} 10 = 1$ in place of $\ln 10$, which gives $0.1\ \text{m}$. Multiplying $\delta$ by 23 in place of 2.3 gives option (D).

## Q.34 MCQ · 2 MARKS

Engineering Mathematics › Differential equations

A curve passes through the point $(x = 1,\ y = 0)$ and satisfies the differential equation

$$\frac{dy}{dx} = \frac{x^2 + y^2}{2y} + \frac{y}{x}.$$

The equation that describes the curve is

**(A)** $\ln\left(1+\frac{y^2}{x^2}\right)=x-1$

**(B)** $\frac{1}{2}\ln\left(1+\frac{y^2}{x^2}\right)=x-1$

**(C)** $\ln\left(1+\frac{y}{x}\right)=x-1$

**(D)** $\frac{1}{2}\ln\left(1+\frac{y}{x}\right)=x-1$

Official answer: **A**

**SOLUTION**

1. Substitute $y=vx$, so $\frac{dy}{dx}=v+x\frac{dv}{dx}$. The last term of the equation, $\frac{y}{x}$, is just $v$.
2. Rewrite the first term: $\frac{x^2+y^2}{2y}=\frac{x^2(1+v^2)}{2vx}=\frac{x(1+v^2)}{2v}$.
3. Substituting gives $v+x\frac{dv}{dx}=\frac{x(1+v^2)}{2v}+v$. The $v$ cancels on both sides, leaving $x\frac{dv}{dx}=\frac{x(1+v^2)}{2v}$. Divide by $x$: $\frac{dv}{dx}=\frac{1+v^2}{2v}$.
4. Separate the variables: $\frac{2v}{1+v^2}\,dv=dx$. The numerator is the derivative of the denominator, so $\int\frac{f'(v)}{f(v)}\,dv=\ln|f(v)|$ with $f=1+v^2$ gives
$$\ln\left(1+v^2\right)=x+C.$$
No modulus is needed because $1+v^2>0$.
5. Put $v=y/x$ back: $\ln\left(1+\frac{y^2}{x^2}\right)=x+C$.
6. Use the point $(1,0)$: $\ln(1+0)=1+C$, so $0=1+C$ and $C=-1$. The curve is
$$\ln\left(1+\frac{y^2}{x^2}\right)=x-1.$$
7. Check: this curve gives $y^2=x^2\left(e^{x-1}-1\right)$. Differentiating, $2yy'=2x\left(e^{x-1}-1\right)+x^2e^{x-1}$. From the differential equation, $2yy'=x^2+y^2+\frac{2y^2}{x}=x^2+x^2\left(e^{x-1}-1\right)+2x\left(e^{x-1}-1\right)=x^2e^{x-1}+2x\left(e^{x-1}-1\right)$. The two expressions are the same, so the answer is option (A).

**KEY IDEA**

The right-hand side depends on $x$ and $y/x$, so try $y=vx$. The $y/x$ term cancels the $v$ that comes from $\frac{dy}{dx}=v+x\frac{dv}{dx}$, and the $x$ factors also cancel. That leaves the separable equation $\frac{2v}{1+v^2}\,dv=dx$. It integrates directly to $\ln(1+v^2)$ because the numerator is the derivative of the denominator.

**WATCH OUT FOR**

Integrating $\frac{2v}{1+v^2}$ as $\frac{1}{2}\ln(1+v^2)$, which confuses it with $\int\frac{v}{1+v^2}\,dv$. That extra half gives option (B). Options (C) and (D) come from putting back $v$ where $v^2$ belongs, i.e. writing $1+y/x$ where the answer has $1+y^2/x^2$.

## Q.35 MCQ · 2 MARKS

Networks (Electric Circuits) › AC, power & resonance

Q.35 For the circuit given in the figure, the voltage $V_C$ (in volts) across the capacitor is

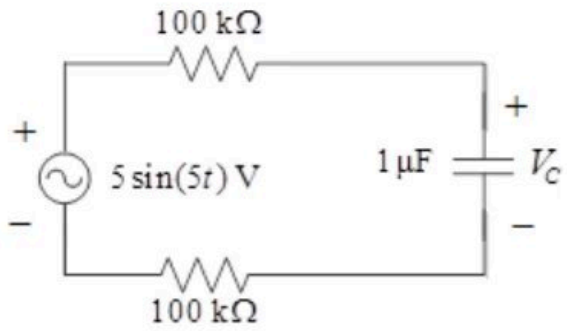


(A) $1.25\sqrt{2}\sin(5t-0.25\pi)$

(B) $1.25\sqrt{2}\sin(5t-0.125\pi)$

(C) $2.5\sqrt{2}\sin(5t-0.25\pi)$

(D) $2.5\sqrt{2}\sin(5t-0.125\pi)$

Official answer: **C**

### SOLUTION

1. **Combine the series resistors:** there is only one loop, so both $100\ \text{k}\Omega$ resistors carry the same current as the capacitor. The one on the return wire counts just as much as the one on top. Together they act as $R = 200\ \text{k}\Omega$ in series with the capacitor.
2. **Capacitor impedance at $\omega = 5$ rad/s:** $Z_C = \dfrac{1}{j\omega C} = \dfrac{1}{j(5)(1\times 10^{-6})} = -j\,200\ \text{k}\Omega.$
3. **Source phasor:** take $\sin(5t)$ as the phase reference. The options are written as amplitudes, so we work with peak phasors: $V_s = 5\angle 0^\circ$ V (peak).
4. **Voltage divider:** the source's + terminal and the capacitor's + plate are both on the top rail, so the divider applies with no sign change:
$$V_C = V_s\,\frac{Z_C}{R+Z_C} = V_s\,\frac{1}{1+j\omega RC}.$$
5. **The key product:** $\omega RC = 5\times(200\times 10^3)\times(1\times 10^{-6}) = 1$, so
$$V_C = \frac{5\angle 0^\circ}{1+j} = \frac{5\angle 0^\circ}{\sqrt{2}\angle 45^\circ} = \frac{5}{\sqrt{2}}\angle -45^\circ\ \text{V (peak)}.$$
6. **Back to the time domain:** $\dfrac{5}{\sqrt{2}} = 2.5\sqrt{2} \approx 3.54$ and $-45^\circ = -0.25\pi$. So $V_C(t) = 2.5\sqrt{2}\sin(5t - 0.25\pi)$ V: the capacitor voltage lags the source by $45^\circ$. This is option (C).

**KEY IDEA**

This is a series RC voltage divider. Both $100\ \text{k}\Omega$ resistors sit in the one loop, so they add to $R = 200\ \text{k}\Omega$ no matter where they are drawn. With $\omega RC = 1$ the divider ratio $\dfrac{1}{1+j\omega RC}$ becomes $\dfrac{1}{\sqrt{2}}\angle -45^\circ$: the amplitude drops by $\sqrt{2}$ and the phase lags by $\pi/4$.

**WATCH OUT FOR**

(1) Leaving out the resistor on the bottom return wire. That uses $R = 100\ \text{k}\Omega$, so $\omega RC = 0.5$, giving about $4.47\angle -26.6^\circ$, which is not among the options. (2) Converting to rms and then dividing by $\sqrt{2}$ a second time. The rms value of $V_C$ is $2.5$ V; dividing again gives $1.25\sqrt{2}$, which is the magnitude in options (A)/(B). (3) Halving the phase to $-0.125\pi$, or using $\omega = 2\pi\times 5$ when the $5$ in $\sin(5t)$ is already $\omega$ in rad/s.

## Q.36 NAT · 2 MARKS

Networks (Electric Circuits) › Transients

Q.36 For the circuit given in the figure, the magnitude of the loop current (in amperes, correct to three decimal places) 0.5 second after closing the switch is _____.

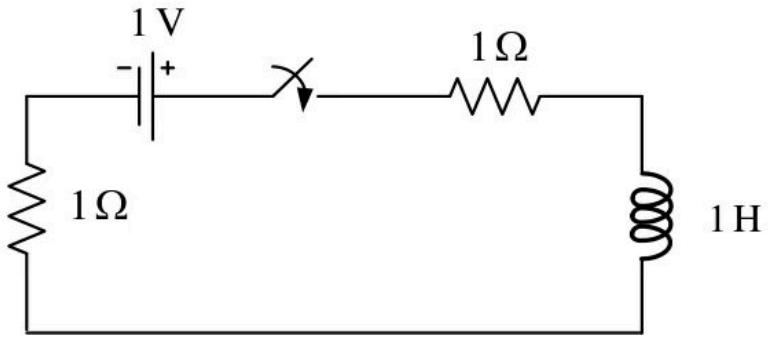


Official answer: **0.284 to 0.348**

### SOLUTION

1. Take $t = 0$ as the instant the switch closes. Before that the loop is open, so no current flows and $i_L(0^-) = 0$. An inductor's current cannot change instantly, so $i(0^+) = i_L(0^-) = 0$.
2. Once the switch closes, the circuit is a single series RL loop. Total resistance $R = 1 + 1 = 2\ \Omega$, source $V = 1\ \text{V}$, $L = 1\ \text{H}$.
3. Final value: in DC steady state the inductor behaves as a short circuit, so $i(\infty) = \dfrac{V}{R} = \dfrac{1}{2} = 0.5\ \text{A}$.
4. Time constant: $\tau = \dfrac{L}{R} = \dfrac{1}{2} = 0.5\ \text{s}$.
5. First-order response: $i(t) = i(\infty) + [i(0^+) - i(\infty)]\, e^{-t/\tau}$, which gives $i(t) = 0.5\left(1 - e^{-2t}\right)\ \text{A}$ for $t \geq 0$.
6. At $t = 0.5\ \text{s}$, exactly one time constant:
$$i(0.5) = 0.5\left(1 - e^{-1}\right) = 0.5 \times 0.63212 = 0.31606\ \text{A}$$
7. Correct to three decimal places, the loop current is $0.316\ \text{A}$.

**KEY IDEA**

A switched series RL loop with a DC source is a first-order circuit. The current starts at zero, because an inductor's current cannot jump. It rises towards $V/R_{\text{total}}$ with time constant $\tau = L/R_{\text{total}}$, and both resistors count because the whole loop is in series. Here 0.5 s is exactly one time constant, so the current has reached $1 - e^{-1} \approx 63.2\%$ of its final value.

**WATCH OUT FOR**

Using only one of the 1 Ω resistors. Because the second resistor sits on the far side of the loop, it is easy to miss that it is in series too. With $R = 1\ \Omega$ you get $\tau = 1\ \text{s}$ and $i(0.5) = 1 - e^{-0.5} \approx 0.393\ \text{A}$, which is outside the key. A second slip is to use $\tau = RL$ or $\tau = R/L$ instead of $L/R$, or to report the final value $0.5\ \text{A}$ as if the transient had already died away.

## Q.37 NAT · 2 MARKS

Analog Electronics › Diode circuits

Q.37 A dc current of $26\,\mu\text{A}$ flows through the circuit shown. The diode in the circuit is forward biased and it has an ideality factor of one. At the quiescent point, the diode has a junction capacitance of $0.5\,\text{nF}$. Its neutral region resistances can be neglected. Assume that the room temperature thermal equivalent voltage is $26\,\text{mV}$.

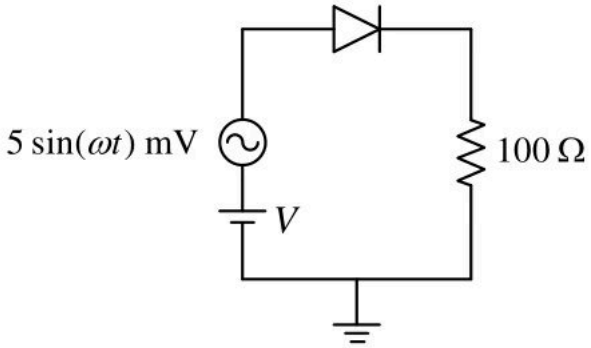


For $\omega = 2\times10^{6}$ rad/s, the amplitude of the small-signal component of diode current (in $\mu\text{A}$, correct to one decimal place) is _____.

EC 11/17

Official answer: **6.2 to 6.6**

**SOLUTION**

1. **Small-signal model of the diode.** At the Q-point the forward-biased diode is modelled as its incremental (dynamic) resistance $r_d$ in parallel with the junction capacitance $C_j = 0.5\,\text{nF}$ given in the question. The neutral-region (series) resistance is neglected, as stated. For the ac analysis the dc battery $V$ is replaced by a short circuit, which leaves the source $5\sin(\omega t)\,\text{mV}$ in series with the diode model and the $100\,\Omega$ resistor.
2. **Incremental resistance** with ideality factor $\eta = 1$ and $I_D = 26\,\mu\text{A}$:
$$r_d = \frac{\eta V_T}{I_D} = \frac{26\,\text{mV}}{26\,\mu\text{A}} = 1\,\text{k}\Omega$$
3. **Capacitive reactance** at $\omega = 2\times10^{6}\,\text{rad/s}$:
$$X_C = \frac{1}{\omega C_j} = \frac{1}{(2\times10^{6})(0.5\times10^{-9})} = \frac{1}{10^{-3}} = 1\,\text{k}\Omega$$
4. **Diode impedance**, with $r_d$ in parallel with $-jX_C$:
$$Z_D = \frac{(1000)(-j1000)}{1000 - j1000} = \frac{-j1000}{1-j} = \frac{-j1000(1+j)}{2} = (500 - j500)\,\Omega$$
5. **Total loop impedance**, adding the series $100\,\Omega$:
$$Z = (600 - j500)\,\Omega, \qquad |Z| = \sqrt{600^2 + 500^2} = \sqrt{610000} \approx 781.0\,\Omega$$
6. **Phasor amplitude of the current.** It is a single series loop, so the whole ac current flows through the diode (as the sum of its $r_d$ and $C_j$ branch currents):
$$|i_d| = \frac{5\,\text{mV}}{781.0\,\Omega} \approx 6.40\,\mu\text{A}$$
Check on the small-signal assumption: the ac voltage across the diode is $|Z_D|\,|i_d| = (707\,\Omega)(6.40\,\mu\text{A}) \approx 4.5\,\text{mV}$, well below $V_T = 26\,\text{mV}$, so the linear model is reasonable.
7. Correct to one decimal place, the amplitude of the small-signal diode current is $6.4\,\mu\text{A}$.

**KEY IDEA**

For small signals, a forward-biased diode acts as its dynamic resistance $r_d = \eta V_T / I_D$ in parallel with its junction capacitance. With the dc source shorted, the ac current is the source amplitude divided by the magnitude of the complex loop impedance, which is $(r_d \parallel C_j)$ in series with the resistor.

**WATCH OUT FOR**

Students often ignore $C_j$ and take $5\,\text{mV}/(1000 + 100)\,\Omega \approx 4.5\,\mu\text{A}$. Another mistake is to add $r_d$ and $X_C$ in series, or to add the magnitudes $|Z_D| + 100$ instead of adding the complex impedances first. Some also report only the current through $r_d$ and leave out the current through the capacitance, although the question asks for the total diode current.

## Q.38 NAT · 2 MARKS

Analog Electronics › Op-amps

Q.38 An op-amp based circuit is implemented as shown below.

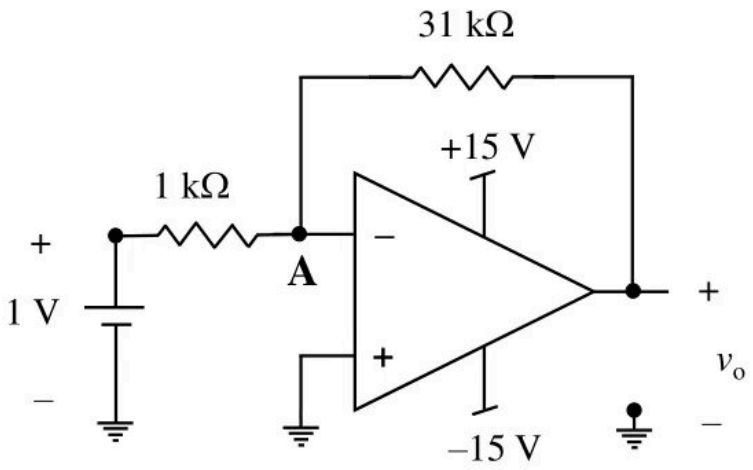


In the above circuit, assume the op-amp to be ideal. The voltage (in volts, correct to one decimal place) at node **A**, connected to the negative input of the op-amp as indicated in the figure is _____.

Official answer: **0.4 to 0.6**

**SOLUTION**

1. Assumptions: the op-amp is ideal (infinite open-loop gain, infinite input resistance, so no current flows into either input), but its output cannot swing beyond its supply rails of $\pm 15\,\text{V}$. First try the linear (virtual-short) model. The (+) input is grounded, so $V_A = 0$, and the inverting-amplifier gain gives
$$v_o = -\frac{31\,\text{k}\Omega}{1\,\text{k}\Omega} \times 1\,\text{V} = -31\,\text{V}$$
2. Check this against the supplies. $-31\,\text{V}$ lies outside $\pm 15\,\text{V}$, so it cannot happen. The output saturates at the negative rail: $v_o = -15\,\text{V}$. An ideal op-amp still cannot drive its output past its supplies.
3. In saturation the op-amp is not working in its linear region, so the virtual short no longer holds and $V_A \neq 0$. The input resistance is still infinite, so the (–) input still draws no current.
4. With no current into the (–) input, the same current $I$ flows through the $1\,\text{k}\Omega$ and $31\,\text{k}\Omega$ resistors in series, from the $1\,\text{V}$ source to $v_o = -15\,\text{V}$:
$$I = \frac{1 - (-15)}{1\,\text{k}\Omega + 31\,\text{k}\Omega} = \frac{16\,\text{V}}{32\,\text{k}\Omega} = 0.5\,\text{mA}$$
5. The voltage at node A, from the drop across the input resistor:
$$V_A = 1\,\text{V} - I\,(1\,\text{k}\Omega) = 1 - 0.5 = 0.5\,\text{V}$$
6. Check using the voltage-divider (superposition) form:
$$V_A = \frac{(1)(31) + (-15)(1)}{31 + 1} = \frac{16}{32} = 0.5\,\text{V}$$

Now confirm the saturation state. $V_+ - V_- = 0 - 0.5 = -0.5\,\text{V} < 0$, so the infinite gain drives the output negative, which matches $v_o = -15\,\text{V}$. The other rail does not work: with $v_o = +15\,\text{V}$ we would get $V_A = (31 + 15)/32 \approx 1.44\,\text{V}$ and $V_+ - V_- < 0$, which would drive the output negative, a contradiction. So the only consistent answer is $V_A = 0.5\,\text{V}$.

**KEY IDEA**

Always check the linear-mode answer against the supply rails. Here the ideal gain of −31 would need −31 V, so the output clips at −15 V. Once the output is saturated, the virtual short is gone. The input still draws no current, though, so node A is set by a plain voltage divider: 31 kΩ and 1 kΩ between +1 V and −15 V.

**WATCH OUT FOR**

Using the virtual short out of habit and answering V_A = 0 V. The virtual short only holds while the op-amp is in its linear region. The linear answer v_o = −31 V lies outside the ±15 V rails, so the op-amp saturates and V_A becomes 0.5 V. A second slip is to calculate the divider with v_o = −31 V instead of the clipped −15 V, which gives V_A = 0 V again.

## Q.39 NAT · 2 MARKS

Signals and Systems › Fourier transform

Q.39 The input $4\text{sinc}(2t)$ is fed to a Hilbert transformer to obtain $y(t)$, as shown in the figure below:

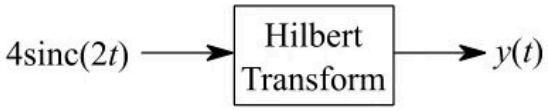


Here $\text{sinc}(x) = \dfrac{\sin(\pi x)}{\pi x}$. The value (accurate to two decimal places) of $\int_{-\infty}^{\infty} |y(t)|^2 dt$ is .

Official answer: **8**

**SOLUTION**

1. **Input spectrum.** With the normalised sinc, $\text{sinc}(t) \leftrightarrow \text{rect}(f)$, and time scaling gives $\text{sinc}(at) \leftrightarrow \frac{1}{a}\,\text{rect}\left(\frac{f}{a}\right)$ for $a > 0$. With $a = 2$:

$$X(f) = 4 \cdot \frac{1}{2}\,\text{rect}\left(\frac{f}{2}\right) = \begin{cases} 2, & |f| < 1 \\ 0, & |f| > 1 \end{cases}$$

2. **Hilbert transformer.** Its frequency response is $H(f) = -j\,\text{sgn}(f)$, so $|H(f)| = 1$ for every $f \neq 0$. So $Y(f) = -j\,\text{sgn}(f)\,X(f)$, and $|Y(f)|^2 = |X(f)|^2$ everywhere except at the single point $f = 0$. A single point adds nothing to an integral.

3. **Parseval's theorem:**

$$\int_{-\infty}^{\infty} |y(t)|^2\,dt = \int_{-\infty}^{\infty} |Y(f)|^2\,df = \int_{-1}^{1} 2^2\,df = 4 \times 2 = 8$$

4. **Check in the time domain.** Since $\int_{-\infty}^{\infty} \text{sinc}^2(at)\,dt = \frac{1}{a}$, the input energy is $16 \cdot \frac{1}{2} = 8$. The Hilbert transform does not change the energy, so $E_y = 8.00$.

**KEY IDEA**

A Hilbert transformer is an all-pass filter, $H(f) = -j\,\mathrm{sgn}(f)$ with $|H(f)| = 1$. It only shifts phase by $\mp 90°$, so the output energy equals the input energy. Find the input energy with Parseval: $4\,\mathrm{sinc}(2t)$ has a flat spectrum of height $2$ over $|f| < 1$, so the energy is $2^2 \times 2 = 8$.

**WATCH OUT FOR**

(1) Reading $\mathrm{sinc}(2t)$ as $\frac{\sin 2t}{2t}$ instead of the stated normalised form $\frac{\sin 2\pi t}{2\pi t}$. That gives $16 \cdot \frac{\pi}{2} = 8\pi \approx 25.13$. (2) Taking the scaled spectrum as $\mathrm{rect}(f/2)$ without the $\frac{1}{2}$ factor, which gives 32. (3) Treating the Hilbert transformer like the analytic-signal operation, which removes negative frequencies, and halving the energy to 4. The Hilbert transformer keeps every frequency and changes only its phase.

## Q.40 NAT · 2 MARKS

Communications › Digital communication

A random variable $X$ takes values $-0.5$ and $0.5$ with probabilities $\frac{1}{4}$ and $\frac{3}{4}$, respectively. The noisy observation of $X$ is $Y = X + Z$, where $Z$ has uniform probability density over the interval $(-1, 1)$. $X$ and $Z$ are independent. If the MAP rule based detector outputs $\hat{X}$ as $\hat{X} = -0.5$ for $Y < \alpha$ and $\hat{X} = 0.5$ for $Y \geq \alpha$, then the value of $\alpha$ (accurate to two decimal places) is _____.

Official answer: **-0.5**

**SOLUTION**

1. The noise density is $f_Z(z) = \frac{1}{2}$ for $-1 < z < 1$ and zero elsewhere. Given $X = -0.5$, $Y = X + Z$ is uniform on $(-1.5,\, 0.5)$ with density $\frac{1}{2}$. Given $X = 0.5$, $Y$ is uniform on $(-0.5,\, 1.5)$ with density $\frac{1}{2}$.
2. The MAP rule decides $\hat{X} = 0.5$ when $P(X = 0.5)\, f(y \mid 0.5) \geq P(X = -0.5)\, f(y \mid -0.5)$. Otherwise it decides $\hat{X} = -0.5$.
3. For $y < -0.5$ we have $f(y \mid 0.5) = 0$ and $f(y \mid -0.5) = \frac{1}{2}$. Only $X = -0.5$ can have produced $y$, so decide $\hat{X} = -0.5$.
4. For $y > 0.5$ we have $f(y \mid -0.5) = 0$ and $f(y \mid 0.5) = \frac{1}{2}$. Only $X = 0.5$ can have produced $y$, so decide $\hat{X} = 0.5$.
5. For $-0.5 \leq y \leq 0.5$ both likelihoods equal $\frac{1}{2}$, so the priors decide. Compare $\frac{3}{4} \cdot \frac{1}{2} = \frac{3}{8}$ with $\frac{1}{4} \cdot \frac{1}{2} = \frac{1}{8}$. Since $\frac{3}{8} > \frac{1}{8}$, decide $\hat{X} = 0.5$.
6. So $\hat{X} = -0.5$ for $Y < -0.5$ and $\hat{X} = 0.5$ for $Y \geq -0.5$. Matching this to the form $\hat{X} = -0.5$ for $Y < \alpha$ and $\hat{X} = 0.5$ for $Y \geq \alpha$ gives

$$\alpha = -0.5$$

**KEY IDEA**

With uniform noise the two conditional densities are flat and overlap only on $(-0.5, 0.5)$. Outside the overlap only one symbol is possible. Inside it the likelihoods are equal, so the larger prior ($\frac{3}{4}$ for $0.5$) wins. The threshold is therefore the lower edge of the overlap.

**WATCH OUT FOR**

Setting the threshold at the midpoint $0$, which is the maximum-likelihood or equal-prior answer. That ignores the unequal priors. With a flat likelihood in the overlap the prior alone decides, so the whole overlap goes to the more probable symbol.

## Q.41 NAT · 2 MARKS

Control Systems › Bode & margins

For a unity feedback control system with the forward path transfer function

$$G(s) = \frac{K}{s(s+2)}$$

The peak resonant magnitude $M_r$ of the closed-loop frequency response is 2. The corresponding value of the gain $K$ (correct to two decimal places) is _____.

Official answer: **14 to 17**

**SOLUTION**

1. Closed-loop transfer function (unity feedback):
$$T(s) = \frac{G(s)}{1+G(s)} = \frac{K}{s^2+2s+K}$$
2. Compare with the standard second-order form $\frac{\omega_n^2}{s^2+2\zeta\omega_n s+\omega_n^2}$: $\omega_n^2 = K$ gives $\omega_n = \sqrt{K}$, and $2\zeta\omega_n = 2$ gives $\zeta = \frac{1}{\sqrt{K}}$, so $K = \frac{1}{\zeta^2}$.
3. Resonant peak of a second-order system (a peak exists only for $\zeta < \frac{1}{\sqrt{2}} \approx 0.707$):
$$M_r = \frac{1}{2\zeta\sqrt{1-\zeta^2}} = 2 \;\Rightarrow\; \zeta\sqrt{1-\zeta^2} = \frac{1}{4} \;\Rightarrow\; \zeta^2(1-\zeta^2) = \frac{1}{16}$$
4. Solve the quadratic in $\zeta^2$:
$$\zeta^4 - \zeta^2 + \frac{1}{16} = 0 \;\Rightarrow\; \zeta^2 = \frac{1 \pm \sqrt{1-\frac{1}{4}}}{2} = \frac{1 \pm \frac{\sqrt{3}}{2}}{2}$$
which gives $\zeta^2 = 0.0670$ or $\zeta^2 = 0.9330$.
5. Reject $\zeta^2 = 0.9330$: then $\zeta = 0.966 > 0.707$, the closed-loop magnitude falls steadily from 1 and there is no resonant peak, so the $M_r$ formula does not apply. Keep $\zeta^2 = \frac{2-\sqrt{3}}{4} = 0.06699$, so $\zeta = 0.2588$.
6. Gain:
$$K = \frac{1}{\zeta^2} = \frac{4}{2-\sqrt{3}} = \frac{4(2+\sqrt{3})}{(2-\sqrt{3})(2+\sqrt{3})} = 4(2+\sqrt{3}) = 8+4\sqrt{3} \approx 14.93$$
7. Check: the resonant frequency is $\omega_r = \omega_n\sqrt{1-2\zeta^2} = \sqrt{K-2} \approx 3.596\ \text{rad/s}$, which is real, so the peak exists. Evaluating $|T(j\omega)| = \frac{K}{|K-\omega^2+j2\omega|}$ at that frequency gives exactly 2.

**KEY IDEA**

For $G(s) = \frac{K}{s(s+a)}$ with unity feedback, the closed loop is a standard second-order system with $\omega_n = \sqrt{K}$ and $\zeta = \frac{a}{2\sqrt{K}}$. Setting $M_r = \frac{1}{2\zeta\sqrt{1-\zeta^2}}$ gives a quadratic in $\zeta^2$. Take only the root with $\zeta < 0.707$, because a resonant peak exists only in that range. Then convert $\zeta$ back to $K$.

**WATCH OUT FOR**

Taking the larger root $\zeta^2 = 0.933$, which gives $K \approx 1.07$. That value of $\zeta$ is above 0.707, where the closed-loop response has no resonant peak, so it cannot have $M_r = 2$. A second slip is to apply $M_r$ to the open-loop $G(j\omega)$ instead of the closed-loop $T(j\omega)$. A third is to write $\zeta = 1/K$ instead of $\zeta = 1/\sqrt{K}$ when comparing with $2\zeta\omega_n = 2$.

## Q.42 NAT · 2 MARKS

Control Systems › Bode & margins

Q.42 The figure below shows the Bode magnitude and phase plots of a stable transfer function $G(s) = \dfrac{n_0}{s^3+d_2s^2+d_1s+d_0}$.

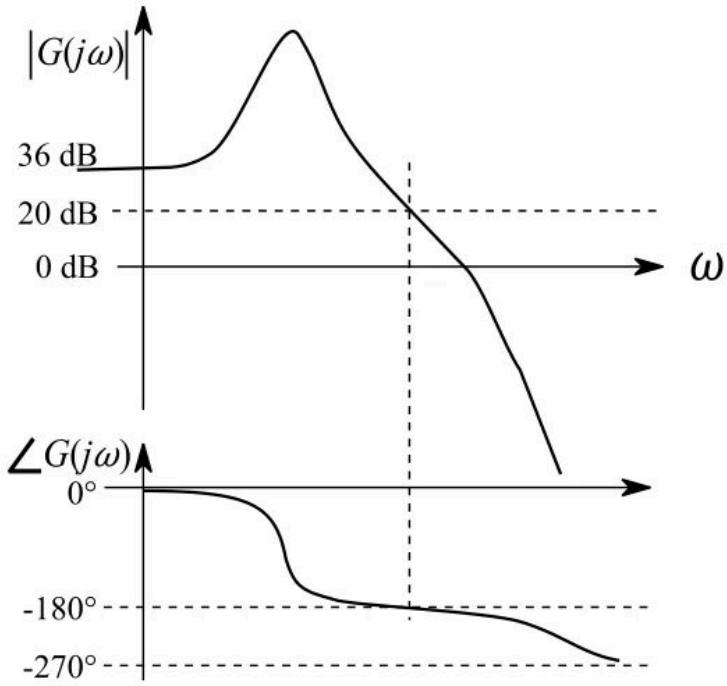


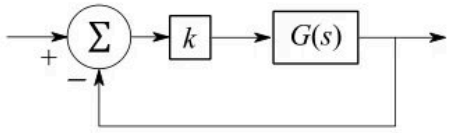


Consider the negative unity feedback configuration with gain $k$ in the feedforward path. The closed loop is stable for $k < k_0$. The maximum value of $k_0$ is _____.

Official answer: **0.1**

**SOLUTION**

1. The open-loop transfer function is $kG(s)$ (with $k > 0$). The question says $G(s)$ is stable, so $kG(s)$ has $P = 0$ poles in the right half-plane. By the Nyquist criterion the closed loop is stable exactly when the polar plot of $kG(j\omega)$ does not encircle the point $-1$.
2. Phase crossover frequency $\omega_{pc}$: this is where $\angle G(j\omega) = -180^\circ$. On the phase plot, the curve starts at $0^\circ$ and falls monotonically towards $-270^\circ$, so it crosses $-180^\circ$ only once, at the vertical dashed line. That means the polar plot crosses the negative real axis only once, at $\omega_{pc}$.
3. Now read the magnitude on the same vertical dashed line: $|G(j\omega_{pc})| = 20$ dB, so
$$|G(j\omega_{pc})| = 10^{20/20} = 10.$$
4. So $G$ alone (with $k = 1$) crosses the negative real axis at $-10$, which is outside $-1$, and the loop would be unstable ($GM = -20$ dB). The gain $k$ scales the whole polar plot, and it has to bring this crossing inside $-1$.
5. With gain $k$, the negative-real-axis crossing sits at $-10k$. There is no encirclement of $-1$ as long as
$$k\,|G(j\omega_{pc})| < 1 \;\Rightarrow\; 10k < 1 \;\Rightarrow\; k < 0.1$$
6. So $k_0 = \dfrac{1}{|G(j\omega_{pc})|} = 0.1$. The 36 dB DC level and the resonant peak do not matter here: they occur at frequencies where the phase is still above $-180^\circ$, so they never touch the negative real axis.

**KEY IDEA**

If the open loop is stable ($P = 0$) and the phase crosses $-180^\circ$ exactly once, the largest stable gain is the gain margin as a plain ratio: $k_0 = 1/|G(j\omega_{pc})|$. Read the magnitude at the phase crossover frequency, not at the gain crossover and not at the peak.

**WATCH OUT FOR**

There are three common slips. (1) Reading the wrong magnitude: the 36 dB DC level (giving $k_0 = 10^{-36/20} \approx 0.016$), the resonant peak, or the 0 dB gain crossover, instead of the magnitude where the phase is $-180^\circ$. (2) Converting 20 dB to 20 instead of 10: magnitude in dB is $20\log_{10}|G|$. (3) Forgetting the reciprocal and answering $k_0 = 10$. The magnitude at $\omega_{pc}$ is already greater than 1, so $k$ must shrink the loop gain, not boost it.

## Q.43 NAT · 2 MARKS

Analog Electronics › Biasing

Q.43 In the circuit shown below, the $(W/L)$ value for $M_2$ is twice that for $M_1$. The two nMOS transistors are otherwise identical. The threshold voltage $V_T$ for both transistors is 1.0V. Note that $V_{GS}$ for $M_2$ must be $> 1.0$ V.

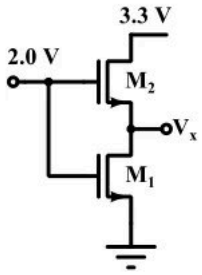


Current through the nMOS transistors can be modeled as

$$I_{DS} = \mu C_{ox}\left(\frac{W}{L}\right)\left((V_{GS} - V_T)V_{DS} - \frac{1}{2}V_{DS}^2\right) \text{ for } V_{DS} \le V_{GS} - V_T$$

$$I_{DS} = \mu C_{ox}\left(\frac{W}{L}\right)(V_{GS} - V_T)^2/2 \quad \text{for } V_{DS} \ge V_{GS} - V_T$$

The voltage (in volts, accurate to two decimal places) at $V_x$ is _____.

EC 13/17

Official answer: **0.41 to 0.435**

**SOLUTION**

1. Both gates are tied to the 2.0 V node, so $V_{GS1} = 2$ V and $V_{GS2} = 2 - V_x$. M2 and M1 are in series, so they carry the same drain current: $I_{D1} = I_{D2}$. Let $k = \mu C_{ox}(W/L)_1$; then $\mu C_{ox}(W/L)_2 = 2k$. Body effect is ignored, since the given current model has no body term.
2. Region of M2: $V_{DS2} = 3.3 - V_x$ and $V_{GS2} - V_T = 1 - V_x$. The saturation condition $V_{DS2} \ge V_{GS2} - V_T$ reduces to $3.3 \ge 1$, which is always true. So whenever M2 conducts, it is in saturation.
3. Region of M1: $V_{GS1} - V_T = 2 - 1 = 1$ V and $V_{DS1} = V_x$. The question requires $V_{GS2} > 1$ V, i.e. $2 - V_x > 1$, so $V_x < 1$ V. That gives $V_{DS1} < V_{GS1} - V_T$, so M1 is in the triode (linear) region.
4. Set the two currents equal using the given models:
$$\frac{2k}{2}(2 - V_x - 1)^2 = k\left(1 \cdot V_x - \frac{1}{2}V_x^2\right)$$
5. Cancel $k$ and simplify: $(1 - V_x)^2 = V_x - \frac{1}{2}V_x^2 \Rightarrow 1 - 2V_x + V_x^2 = V_x - \frac{1}{2}V_x^2 \Rightarrow 1.5V_x^2 - 3V_x + 1 = 0$.
6. Solve the quadratic:
$$V_x = \frac{3 \pm \sqrt{9 - 6}}{3} = \frac{3 \pm \sqrt{3}}{3} = 1.577 \text{ V or } 0.423 \text{ V}$$
7. Reject $V_x = 1.577$ V: it gives $V_{GS2} = 0.423$ V $< V_T$, so M2 would be off, and $V_x > 1$ V contradicts the triode assumption for M1. Keep $V_x = 1 - \frac{1}{\sqrt{3}} = 0.4226$ V. Check: $V_{DS1} = 0.423 < 1$ (M1 triode, consistent) and $V_{GS2} = 1.577 > 1$ (M2 on and saturated, consistent).
8. Therefore $V_x \approx 0.42$ V.

**KEY IDEA**

Series transistors carry the same current. M2 has its drain on the 3.3 V rail, so $V_{DS2} - (V_{GS2} - V_T) = 2.3\ \text{V} > 0$ and it is always saturated when on. M1 has $V_{GS1} - V_T = 1\ \text{V}$, and the requirement $V_{GS2} > V_T$ forces $V_x < 1\ \text{V}$, so M1 is in triode. Setting the saturation current equal to the triode current gives a quadratic in $V_x$. Keep only the root that satisfies both region assumptions.

**WATCH OUT FOR**

Assuming both transistors are saturated. Equating $k(1 - V_x)^2$ with $\frac{k}{2}(1)^2$ gives $V_x \approx 0.29\ \text{V}$, which breaks M1's saturation condition ($V_{DS1} = 0.29 < 1$). Two other mistakes: keeping the root $1.577\ \text{V}$, which switches M2 off, and forgetting the factor 2 in $(W/L)_2$.

## Q.44 NAT · 2 MARKS

Electronic Devices › Optoelectronics

A solar cell of area $1.0\ \text{cm}^2$, operating at $1.0$ sun intensity, has a short circuit current of $20\ \text{mA}$, and an open circuit voltage of $0.65\ \text{V}$. Assuming room temperature operation and thermal equivalent voltage of $26\ \text{mV}$, the open circuit voltage (in volts, correct to two decimal places) at $0.2$ sun intensity is _____.

Official answer: **0.59 to 0.63**

**SOLUTION**

1. **Governing relation.** For a solar cell, the open-circuit voltage satisfies $V_{oc} = V_T \ln\left(\frac{I_{sc}}{I_0} + 1\right)$, where $I_0$ is the reverse saturation (dark) current of the cell's diode, and $V_T = 26\ \text{mV}$ is the given thermal equivalent voltage.
2. **Scaling of $I_{sc}$ with intensity.** Short-circuit current is proportional to the photogenerated current, hence proportional to illumination intensity. At $1.0$ sun, $I_{sc,1} = 20\ \text{mA}$; at $0.2$ sun, $I_{sc,2} = 0.2 \times 20\ \text{mA} = 4\ \text{mA}$.
3. **Justifying the large-argument approximation.** Using the 1-sun data:
$$0.65 = 0.026\ \ln\left(\frac{20 \times 10^{-3}}{I_0} + 1\right)$$
so
$$\frac{I_{sc,1}}{I_0} + 1 = e^{0.65/0.026} = e^{25},$$
an enormously large number. Hence $I_{sc}/I_0 \gg 1$ at both intensities (at $0.2$ sun this ratio is only $5\times$ smaller, still enormous), so the "$+1$" can be dropped: $V_{oc} \approx V_T \ln(I_{sc}/I_0)$.
4. **Difference between the two conditions.** Since $I_0$ does not depend on illumination, it cancels when the two conditions are subtracted:
$$\Delta V_{oc} = V_{oc,2} - V_{oc,1} = V_T\left[\ln\left(\frac{I_{sc,2}}{I_0}\right) - \ln\left(\frac{I_{sc,1}}{I_0}\right)\right] = V_T \ln\left(\frac{I_{sc,2}}{I_{sc,1}}\right).$$
5. **Numerical evaluation.**
$$\Delta V_{oc} = 0.026 \times \ln(0.2) = 0.026 \times (-1.6094) = -0.0418\ \text{V}.$$
6. **Final value.**
$$V_{oc,2} = 0.65 - 0.0418 = 0.6082\ \text{V} \approx 0.61\ \text{V}.$$

**KEY IDEA**

A solar cell's open-circuit voltage is $V_{oc} = V_T \ln\left(\frac{I_{sc}}{I_0} + 1\right)$. Since $I_{sc}/I_0 \gg 1$ (verified from the 1-sun data, where $I_{sc}/I_0 = e^{0.65/0.026} - 1$, an enormous number), this reduces to $V_{oc} \approx V_T \ln(I_{sc}/I_0)$, so a change in illumination (which changes $I_{sc}$ proportionally, with $I_0$ unchanged) shifts $V_{oc}$ by $\Delta V_{oc} = V_T \ln\left(\frac{I_{sc,2}}{I_{sc,1}}\right)$.

**WATCH OUT FOR**

Assuming $V_{oc}$ scales linearly or logarithmically with intensity directly (e.g., $V_{oc,2} = 0.2 \times 0.65$), instead of recognizing that only $I_{sc}$ is proportional to intensity, and that $V_{oc}$ changes by $V_T \ln(\text{intensity ratio})$ through the diode equation. Also, forgetting to first justify $I_{sc}/I_0 \gg 1$ before dropping the "+1": without that check, the cancellation of $I_0$ between the two conditions is unjustified.

## Q.45 NAT · 2 MARKS

Electronic Devices › Semiconductors

A junction is made between $p^-$ Si with doping density $N_{A1} = 10^{15}\ \text{cm}^{-3}$ and $p$ Si with doping density $N_{A2} = 10^{17}\ \text{cm}^{-3}$.

Given: Boltzmann constant $k = 1.38 \times 10^{-23}\ \text{J·K}^{-1}$, electronic charge $q = 1.6 \times 10^{-19}\ \text{C}$. Assume 100% acceptor ionization.

At room temperature ($T = 300\text{K}$), the magnitude of the built-in potential (in volts, correct to two decimal places) across this junction will be ____.

Official answer: **0.11 to 0.13**

**SOLUTION**

1. This is a p$^-$–p homojunction (an isotype or "high-low" junction), not a p-n junction: both sides are p-type Si, with $N_{A1} = 10^{15}\ \text{cm}^{-3}$ on the lightly doped ($p^-$) side and $N_{A2} = 10^{17}\ \text{cm}^{-3}$ on the heavily doped ($p$) side.
2. With 100% acceptor ionization, the equilibrium hole concentration on each side equals the doping density: $p_1 = N_{A1}$ and $p_2 = N_{A2}$.
3. For an isotype (p–p$^+$) junction, the built-in potential is set directly by the ratio of the majority-carrier (hole) concentrations on the two sides:
$$V_{bi} = V_T \ln\left(\frac{p_2}{p_1}\right) = V_T \ln\left(\frac{N_{A2}}{N_{A1}}\right)$$
4. Compute the thermal voltage:
$$V_T = \frac{kT}{q} = \frac{(1.38 \times 10^{-23}\ \text{J·K}^{-1})(300\ \text{K})}{1.6 \times 10^{-19}\ \text{C}} = 0.025875\ \text{V}$$
5. Compute the doping ratio:
$$\frac{N_{A2}}{N_{A1}} = \frac{10^{17}}{10^{15}} = 100, \qquad \ln(100) = 4.6052$$
6. Combine:
$$V_{bi} = 0.025875 \times 4.6052 \approx 0.1192\ \text{V}$$
7. Rounded to two decimal places, the magnitude of the built-in potential is $V_{bi} \approx 0.12\ \text{V}$.

**KEY IDEA**

This is a p$^-$–p (isotype / high-low) homojunction, not a p-n junction. Since both sides are p-type, the built-in potential is set by the ratio of the majority-carrier (hole) concentrations on the two sides, not by an $n_i^2$/minority-carrier expression: $V_{bi} = V_T \ln\left(\frac{N_{A2}}{N_{A1}}\right)$, with $V_T = kT/q$.

**WATCH OUT FOR**

Treating this as a standard p-n junction and reaching for $V_{bi} = V_T \ln\left(\frac{N_A N_D}{n_i^2}\right)$; that formula does not apply here since there is no donor density and no $n_i$ given (and none is needed): both regions are p-type, so the isotype-junction formula using only the two acceptor densities must be used instead.

## Q.46 NAT · 2 MARKS

Digital Electronics › Sequential

Q.46 In the circuit shown below, a positive edge-triggered D Flip-Flop is used for sampling input data $D_{in}$ using clock $CK$. The XOR gate outputs 3.3 volts for logic HIGH and 0 volts for logic LOW levels. The data bit and clock periods are equal and the value of $\Delta T/T_{CK} = 0.15$, where the parameters $\Delta T$ and $T_{CK}$ are shown in the figure. Assume that the Flip-Flop and the XOR gate are ideal.

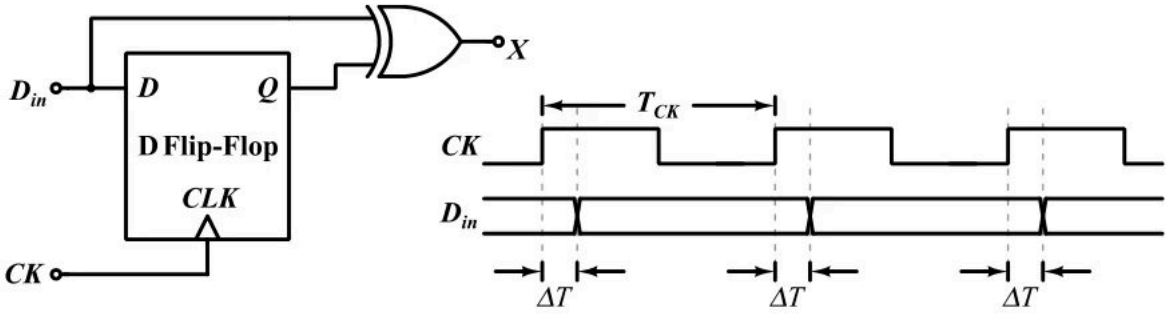


If the probability of input data bit ($D_{in}$) transition in each clock period is 0.3, the average value (in volts, accurate to two decimal places) of the voltage at node $X$, is _____.

EC 14/17

Official answer: **0.82 to 0.86**

### SOLUTION

1. **When does the flip-flop sample?** $D_{in}$ changes $\Delta T$ *after* each rising edge of $CK$. So at every rising edge the flip-flop captures the bit that has been on $D_{in}$ since just after the previous edge. Call the rising edges $t_k$ and call $b_k$ the bit that appears on $D_{in}$ at $t_k + \Delta T$. Then at edge $t_k$ the input still holds $b_{k-1}$, and $Q \to b_{k-1}$.
2. **Interval $[t_k,\ t_k + \Delta T]$, just after the edge:** $D_{in}$ has not changed yet, so $D_{in} = b_{k-1} = Q$. That makes $X = D_{in} \oplus Q = 0$ in every period.
3. **Interval $[t_k + \Delta T,\ t_{k+1}]$:** $D_{in}$ has moved on to $b_k$, but $Q$ still holds $b_{k-1}$ until the next edge. So $X = b_k \oplus b_{k-1}$, which is 1 only if the data bit changed in this period. This interval lasts $T_{CK} - \Delta T$.
4. **Fraction of a period in which $X$ is HIGH, given a transition:** $\dfrac{T_{CK} - \Delta T}{T_{CK}} = 1 - 0.15 = 0.85$. With no transition, $X = 0$ for the whole period.
5. **Average over many periods (expected value):** a transition happens in a period with probability $0.3$, and $X$ is $3.3$ V when HIGH, so
$$\overline{V_X} = 3.3 \times 0.3 \times 0.85 = 0.8415 \text{ V}$$
6. To two decimal places, $\overline{V_X} \approx 0.84$ V.

**KEY IDEA**

$X = D_{in} \oplus Q$ compares the new data bit with the previous bit held in the flip-flop. $X$ is HIGH only between the moment $D_{in}$ changes ($\Delta T$ after an edge) and the next rising edge, when the flip-flop copies the new bit into $Q$. That window is $T_{CK} - \Delta T$ long and appears only in periods where the data changes. So the average is $V_H \times P(\text{transition}) \times (1 - \Delta T/T_{CK})$.

**WATCH OUT FOR**

Taking the HIGH window of $X$ as $\Delta T$ instead of $T_{CK} - \Delta T$. That gives $3.3 \times 0.3 \times 0.15 \approx 0.15$ V. The edge samples the OLD bit, because $D_{in}$ changes only after the edge. So $Q$ lags $D_{in}$ for almost the whole period, not just for $\Delta T$. Other slips are leaving out the transition probability (giving $2.81$ V) and multiplying by the clock's 50% duty cycle, which has nothing to do with the output.

## Q.47 NAT · 2 MARKS

Digital Electronics › Boolean logic

Q.47 The logic gates shown in the digital circuit below use strong pull-down nMOS transistors for LOW logic level at the outputs. When the pull-downs are off, high-value resistors set the output logic levels to HIGH (i.e. the pull-ups are weak). Note that some nodes are intentionally shorted to implement "wired logic". Such shorted nodes will be HIGH only if the outputs of all the gates whose outputs are shorted are HIGH.

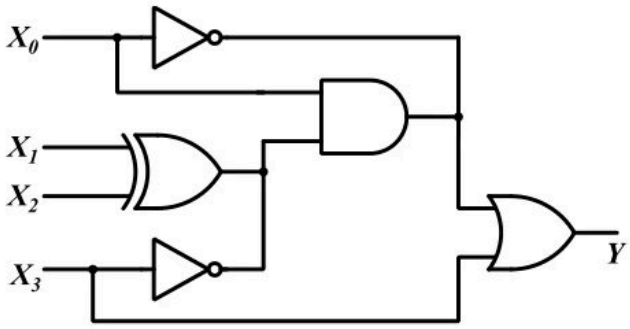


The number of distinct values of $X_3X_2X_1X_0$ (out of the 16 possible values) that give $Y = 1$ is .

Official answer: **8**

### SOLUTION

1. **Wired-AND rule.** The pull-downs are strong and the pull-ups are weak. So when several gate outputs are shorted together, any one output that is LOW pulls the node LOW, and the node is HIGH only if every tied output is HIGH. Each shorted node therefore carries the AND of the outputs tied to it. (In what follows, $\overline{X}$ means the complement of $X$.)
2. **Node at the AND gate's lower input.** The XOR output is shorted to the output of NOT($X_3$), so this node carries
$$A = (X_1 \oplus X_2) \cdot \overline{X_3}$$
3. **AND gate output.** Its top input is $X_0$ itself, taken from the junction *before* the inverter. Its bottom input is $A$. So it outputs $X_0 \cdot A$.
4. **Node at the OR gate's upper input.** The AND output is shorted to the output of NOT($X_0$), so this node carries
$$B = (X_0 \cdot A) \cdot \overline{X_0} = (X_0\,\overline{X_0}) \cdot A = 0$$
because $X_0\,\overline{X_0} = 0$. You can also see it directly: if $X_0 = 1$, NOT($X_0$) outputs LOW; if $X_0 = 0$, the AND gate outputs LOW. Either way one of the two tied outputs is LOW, and it pulls the node down.
5. **OR gate.** Its lower input is $X_3$, taken directly from the junction before the second inverter, so
$$Y = B + X_3 = 0 + X_3 = X_3$$
6. **Count the input words.** $Y = 1$ exactly when $X_3 = 1$. $X_2$, $X_1$ and $X_0$ can each be anything, so $2^3 = 8$ of the 16 combinations give $Y = 1$.

**KEY IDEA**

With strong pull-downs and weak pull-ups, a shorted node is the AND of every output tied to it (wired-AND). The node at the OR gate's upper input ties $X_0 \cdot (\ldots)$ to $\overline{X_0}$, so it is always 0. That leaves $Y = X_3$.

**WATCH OUT FOR**

Treating the shorted nodes as wired-OR, or ignoring the shorts and reading each wire as a single gate's output. A second slip is to feed $\overline{X_0}$ (instead of $X_0$) into the AND gate, or $\overline{X_3}$ (instead of $X_3$) into the OR gate. Both taps are taken before the inverters.

## Q.48 NAT · 2 MARKS

Electromagnetics › Waveguides & fibres

The cutoff frequency of $TE_{01}$ mode of an air filled rectangular waveguide having inner dimensions $a$ cm $\times$ $b$ cm $(a > b)$ is twice that of the dominant $TE_{10}$ mode. When the waveguide is operated at a frequency which is 25% higher than the cutoff frequency of the dominant mode, the guide wavelength is found to be 4 cm. The value of $b$ (in cm, correct to two decimal places) is _____.

Official answer: **0.7 to 0.8**

**SOLUTION**

1. **Cut-off frequencies of an air-filled rectangular guide.** For air, $f_{c,mn} = \frac{c}{2}\sqrt{\left(\frac{m}{a}\right)^2 + \left(\frac{n}{b}\right)^2}$, where $c = 3 \times 10^8$ m/s. This gives $f_{c,10} = \frac{c}{2a}$ and $f_{c,01} = \frac{c}{2b}$.
2. **Use the given ratio.** $f_{c,01} = 2f_{c,10}$ means $\frac{c}{2b} = 2 \cdot \frac{c}{2a}$, so $a = 2b$.
3. **Operating frequency.** $f = 1.25\, f_{c,10}$, so $\frac{f_{c,10}}{f} = \frac{1}{1.25} = 0.8$. The next modes, $TE_{01}$ and $TE_{20}$, both cut off at $2f_{c,10}$ (because $a = 2b$), which is above $f$. Only $TE_{10}$ propagates, so the stated guide wavelength belongs to $TE_{10}$.
4. **Free-space wavelength at $f$.** $\lambda = \frac{c}{f} = \frac{c}{1.25\,(c/2a)} = \frac{2a}{1.25} = 1.6a$.
5. **Guide wavelength.**
$$\lambda_g = \frac{\lambda}{\sqrt{1 - (f_{c,10}/f)^2}} = \frac{1.6a}{\sqrt{1 - 0.64}} = \frac{1.6a}{0.6} = \frac{8a}{3}$$
6. **Solve for $a$.** $\frac{8a}{3} = 4$ cm, so $a = 1.5$ cm.
7. **Find $b$.** $b = \frac{a}{2} = 0.75$ cm.

**KEY IDEA**

In an air-filled guide, $f_{c,10} = c/2a$ and $f_{c,01} = c/2b$, so the cut-off ratio gives $a = 2b$. The guide wavelength is $\lambda_g = \lambda/\sqrt{1 - (f_c/f)^2}$. With $f = 1.25 f_c$ we get $f_c/f = 0.8$ and a denominator of exactly $0.6$. Writing $\lambda = c/f$ in terms of $a$ leaves one unknown.

**WATCH OUT FOR**

One slip is to take $f_c/f = 1.25$, or $0.75$ ("25% higher" misread), instead of $1/1.25 = 0.8$. Another is to set the free-space wavelength, rather than the guide wavelength, equal to 4 cm, which gives $a = 2.5$ cm and $b = 1.25$ cm. A third is to stop at $a = 1.5$ cm and report it, when the question asks for $b = a/2$.

## Q.49 NAT · 2 MARKS

Electromagnetics › Plane waves

Q.49 A uniform plane wave traveling in free space and having the electric field

$$\vec{E} = \left(\sqrt{2}\hat{a}_x - \hat{a}_z\right)\cos\left[6\sqrt{3}\pi \times 10^8 t - 2\pi\left(x + \sqrt{2}z\right)\right] \; V/m$$

is incident on a dielectric medium (relative permittivity > 1, relative permeability = 1) as shown in the figure and there is no reflected wave.

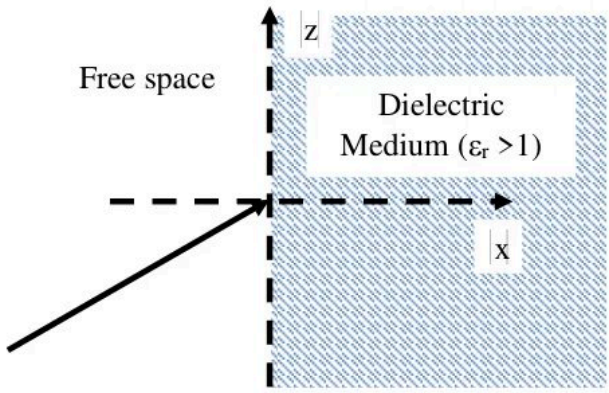


The relative permittivity (correct to two decimal places) of the dielectric medium is _____.



Official answer: **1.9 to 2.1**

**SOLUTION**

1. Compare the phase with $\omega t - \mathbf{k}\cdot\mathbf{r}$. This gives $\omega = 6\sqrt{3}\pi \times 10^8$ rad/s and $\mathbf{k} = 2\pi\left(\hat{a}_x + \sqrt{2}\,\hat{a}_z\right)$ rad/m. So $k_x = 2\pi$, $k_z = 2\sqrt{2}\pi$ and $|\mathbf{k}| = 2\pi\sqrt{1+2} = 2\sqrt{3}\pi$ rad/m. Check against free space, where $c = 1/\sqrt{\mu_0\varepsilon_0} = 3 \times 10^8$ m/s ($\mu_0 = 4\pi \times 10^{-7}$ H/m, $\varepsilon_0 \approx 8.854 \times 10^{-12}$ F/m): $\omega/c = \dfrac{6\sqrt{3}\pi \times 10^8}{3 \times 10^8} = 2\sqrt{3}\pi$. It matches.
2. Check that the wave is transverse: $\mathbf{E}_0 \cdot \mathbf{k} \propto (\sqrt{2})(1) + (-1)(\sqrt{2}) = 0$. So this is a valid uniform plane wave.
3. The interface is the plane $x = 0$, so its normal is $\hat{a}_x$. Both $k_x$ and $k_z$ are positive, so the wave travels towards $+x$, from free space into the dielectric, as the figure shows. The plane of incidence contains $\mathbf{k}$ and the normal, so it is the $xz$-plane.
4. $\mathbf{E}$ has only $x$ and $z$ components, so it lies in the plane of incidence, and $\mathbf{H}$ lies along $\pm\hat{a}_y$. This is parallel (TM) polarisation.
5. Measure the angle of incidence from the normal (the $x$-axis): $\cos\theta_i = \dfrac{k_x}{|\mathbf{k}|} = \dfrac{1}{\sqrt{3}}$ and $\tan\theta_i = \dfrac{k_z}{k_x} = \dfrac{2\sqrt{2}\pi}{2\pi} = \sqrt{2}$, so $\theta_i = \tan^{-1}\sqrt{2} \approx 54.74°$. The figure is not drawn to scale, so take the angle from $\mathbf{k}$ and not from the sketch.
6. For parallel polarisation the reflection coefficient is $\Gamma_{\parallel} = \dfrac{\eta_2\cos\theta_t - \eta_1\cos\theta_i}{\eta_2\cos\theta_t + \eta_1\cos\theta_i}$. It is zero at the Brewster angle. When $\mu_1 = \mu_2 = \mu_0$, that angle is $\tan\theta_B = \sqrt{\dfrac{\varepsilon_{r2}}{\varepsilon_{r1}}} = \sqrt{\varepsilon_r}$, because medium 1 is free space. (For perpendicular polarisation between non-magnetic media no such angle exists. Here the wave is parallel-polarised, so 'no reflected wave' means it is incident at $\theta_B$.)

7. Set $\theta_i = \theta_B$: $\sqrt{\varepsilon_r} = \tan\theta_i = \sqrt{2}$, so $\varepsilon_r = 2.00$. Check with Snell's law: $\sin\theta_t = \dfrac{\sin\theta_i}{\sqrt{\varepsilon_r}} = \dfrac{\sqrt{2}/\sqrt{3}}{\sqrt{2}} = \dfrac{1}{\sqrt{3}}$.

   This gives $\theta_t \approx 35.26^\circ$ and $\theta_i + \theta_t = 90^\circ$, which is exactly the Brewster condition.

**KEY IDEA**

'No reflected wave' for a wave whose $\mathbf{E}$ lies in the plane of incidence (parallel/TM polarisation) means it arrives at the Brewster angle. Between non-magnetic media that angle is $\tan\theta_B = \sqrt{\varepsilon_{r2}/\varepsilon_{r1}}$. Read $\theta_i$ from the wave vector in the phase: $\tan\theta_i = k_z/k_x$, measured from the interface normal $\hat{a}_x$.

**WATCH OUT FOR**

One mistake is measuring the angle from the interface instead of the normal. That gives $\tan\theta = k_x/k_z = 1/\sqrt{2}$ and $\varepsilon_r = 0.5$, which the condition $\varepsilon_r > 1$ rules out. Another is writing $\tan\theta_B = \varepsilon_r$ without the square root, which gives $\varepsilon_r = \sqrt{2} \approx 1.41$. A third is reading the angle off the sketch, which is not to scale: the drawn ray makes about $30^\circ$ with the normal. Some students also try a Brewster condition for perpendicular polarisation, but between non-magnetic media none exists. This wave is parallel-polarised because $\mathbf{E}$ has only $x$ and $z$ components.

## Q.50 NAT · 2 MARKS

Engineering Mathematics › Differential equations

The position of a particle $y(t)$ is described by the differential equation:

$$\frac{d^2y}{dt^2} = -\frac{dy}{dt} - \frac{5y}{4}.$$

The initial conditions are $y(0) = 1$ and $\left.\dfrac{dy}{dt}\right|_{t=0} = 0$. The position (accurate to two decimal places) of the particle at $t = \pi$ is _____.

Official answer: **-0.23 to -0.19**

**SOLUTION**

1. Move every term to one side: $y'' + y' + \frac{5}{4}y = 0$. This is a linear, homogeneous ODE with constant coefficients.
2. Auxiliary equation: $m^2 + m + \frac{5}{4} = 0 \Rightarrow m = \dfrac{-1 \pm \sqrt{1-5}}{2} = \dfrac{-1 \pm 2j}{2} = -\frac{1}{2} \pm j$.
3. The roots are complex, $\alpha \pm j\beta$ with $\alpha = -\frac{1}{2}$ and $\beta = 1$, so the general solution is $y(t) = e^{-t/2}\left(A\cos t + B\sin t\right)$.
4. Apply $y(0) = 1$: $e^0(A \cdot 1 + B \cdot 0) = A = 1$.
5. Differentiate with the product rule:

   $$y'(t) = -\frac{1}{2}e^{-t/2}\left(A\cos t + B\sin t\right) + e^{-t/2}\left(-A\sin t + B\cos t\right) = e^{-t/2}\left[\left(B - \frac{A}{2}\right)\cos t - \left(A + \frac{B}{2}\right)\sin t\right]$$

   At $t = 0$: $y'(0) = B - \frac{A}{2} = 0 \Rightarrow B = \frac{1}{2}$.
6. So the solution that meets both initial conditions is $y(t) = e^{-t/2}\left(\cos t + \frac{1}{2}\sin t\right)$.
7. Evaluate at $t = \pi$, using $\cos\pi = -1$ and $\sin\pi = 0$:

   $$y(\pi) = e^{-\pi/2}\left(-1 + 0\right) = -e^{-\pi/2} \approx -0.2079 \approx -0.21$$

**KEY IDEA**

Write the equation as $y'' + y' + \frac{5}{4}y = 0$. Its auxiliary roots are $-\frac{1}{2} \pm j$, so the motion is a decaying oscillation, $e^{-t/2}(A\cos t + B\sin t)$. Use the two initial conditions to find $A$ and $B$. At $t = \pi$ the sine term is zero, so only $A\cos\pi\, e^{-\pi/2}$ is left.

**WATCH OUT FOR**

Setting $B = 0$ because $y'(0) = 0$. The decay factor $e^{-t/2}$ also contributes to the derivative, so $y'(0) = B - \frac{A}{2}$ and $B = \frac{1}{2}$. At $t = \pi$ this particular slip does no harm, because $\sin\pi = 0$. The same slip does change the answer at other times. Another mistake is copying the signs wrongly when moving terms across, for example writing $m^2 - m + \frac{5}{4} = 0$. That gives a growing solution and $y(\pi) = -e^{\pi/2} \approx -4.81$. Some candidates also forget the negative sign that $\cos\pi = -1$ brings in and enter $+0.21$.

## Q.51 NAT · 2 MARKS

Engineering Mathematics › Complex analysis

Q.51 The contour $C$ given below is on the complex plane $z = x + jy$, where $j = \sqrt{-1}$.

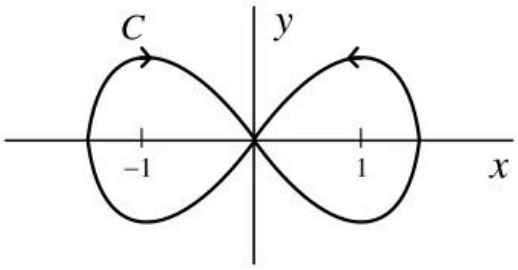


The value of the integral $\frac{1}{\pi j}\oint_C \frac{dz}{z^2 - 1}$ is _____.

Official answer: **2**

**SOLUTION**

1. **Singularities.**
$$\frac{1}{z^2 - 1} = \frac{1}{(z-1)(z+1)}$$
has simple poles at $z = 1$ and $z = -1$ and is analytic everywhere else. That includes the crossing point $z = 0$, where the integrand equals $-1$, so the self-crossing of $C$ causes no difficulty. In the figure, $z = -1$ is inside the left lobe, $z = 1$ is inside the right lobe, and neither pole lies on $C$.
2. **Direction of each lobe, read from the arrows.** On top of the left lobe the arrow points right (east, toward the origin). A loop whose top is travelled eastward goes **clockwise**, so the left lobe goes clockwise round $z = -1$. On top of the right lobe the arrow points left (west). A loop whose top is travelled westward goes **counter-clockwise**, so the right lobe goes counter-clockwise round $z = 1$. Both readings fit one continuous path: along the top of the left lobe, through the origin, east along the bottom of the right lobe, back west along its top, through the origin again, west along the bottom of the left lobe, and back up.
3. **Winding numbers.** From step 2, $n(C, 1) = +1$ and $n(C, -1) = -1$. A clockwise loop round a pole contributes $-2\pi j$ times that pole's residue, not $+2\pi j$ times it.
4. **Residue at each simple pole**, using $\mathrm{Res}_{z=a} f = \lim_{z\to a}(z-a)f(z)$:
$$\mathrm{Res}_{z=1} = \frac{1}{1+1} = \frac{1}{2}, \qquad \mathrm{Res}_{z=-1} = \frac{1}{-1-1} = -\frac{1}{2}.$$
5. **Generalised residue theorem**, $\oint_C f\,dz = 2\pi j \sum_k n(C, a_k)\,\mathrm{Res}_{a_k} f$:
$$\oint_C \frac{dz}{z^2 - 1} = 2\pi j\left[(+1)\left(\frac{1}{2}\right) + (-1)\left(-\frac{1}{2}\right)\right] = 2\pi j\left[\frac{1}{2} + \frac{1}{2}\right] = 2\pi j.$$

6. **Scale by the prefactor:**

$$\frac{1}{\pi j}\cdot 2\pi j = 2.$$

**KEY IDEA**

A figure-eight contour winds in opposite senses round its two lobes, so the winding numbers are $+1$ round $z=1$ (counter-clockwise lobe) and $-1$ round $z=-1$ (clockwise lobe). The two residues also have opposite signs ($\frac{1}{2}$ and $-\frac{1}{2}$), so the two sign flips cancel and the contributions add instead of cancelling. Partial fractions give the same result: $\frac{1}{z^2-1} = \frac{1}{2}\left[\frac{1}{z-1}-\frac{1}{z+1}\right]$, so $\oint_C = \frac{1}{2}\left[2\pi j(+1) - 2\pi j(-1)\right] = 2\pi j$.

**WATCH OUT FOR**

Ignoring the arrows and treating the whole contour as counter-clockwise. That adds the residues with the same sign, $\frac{1}{2}+\left(-\frac{1}{2}\right)=0$, and gives the wrong answer $0$. Another slip is reading the direction of only one lobe and assuming the other lobe goes the same way. A single continuous figure-eight always traverses its two lobes in opposite senses.

## Q.52 NAT · 2 MARKS

Engineering Mathematics › Calculus

Let $r = x^2 + y - z$ and $z^3 - xy + yz + y^3 = 1$. Assume that $x$ and $y$ are independent variables. At $(x, y, z) = (2, -1, 1)$, the value (correct to two decimal places) of $\frac{\partial r}{\partial x}$ is _____

Official answer: **4.4 to 4.6**

**SOLUTION**

1. Since $x$ and $y$ are independent, the constraint $z^3 - xy + yz + y^3 = 1$ fixes $z$ as an implicit function $z(x, y)$. So $r = x^2 + y - z$ depends on $x$ in two ways: directly, and through $z$. With $y$ held constant,
$$\frac{\partial r}{\partial x} = 2x - \frac{\partial z}{\partial x}$$
2. Check that the point lies on the surface: $1^3 - (2)(-1) + (-1)(1) + (-1)^3 = 1 + 2 - 1 - 1 = 1$. It does.
3. Differentiate the constraint implicitly with respect to $x$, holding $y$ constant:
$$3z^2\frac{\partial z}{\partial x} - y + y\frac{\partial z}{\partial x} = 0$$
4. Solve for the derivative:
$$\frac{\partial z}{\partial x} = \frac{y}{3z^2 + y}$$
At the given point the denominator is $3(1)^2 + (-1) = 2 \neq 0$, so $z(x, y)$ is well defined and differentiable there.
5. At $(2, -1, 1)$: $\frac{\partial z}{\partial x} = \frac{-1}{3(1)^2 + (-1)} = \frac{-1}{2} = -0.5$.
6. Substitute:
$$\frac{\partial r}{\partial x} = 2(2) - (-0.5) = 4 + 0.5 = 4.5$$
7. Answer: $\frac{\partial r}{\partial x} = 4.50$.

**KEY IDEA**

$z$ is not an independent variable. The constraint makes it a function of $x$ and $y$, so $\frac{\partial r}{\partial x} = \frac{\partial r}{\partial x}\Big|_{\text{direct}} + \frac{\partial r}{\partial z}\frac{\partial z}{\partial x}$. Find $\frac{\partial z}{\partial x}$ by implicit differentiation: $\frac{\partial z}{\partial x} = -\frac{F_x}{F_z}$, where $F = z^3 - xy + yz + y^3 - 1$.

**WATCH OUT FOR**

Treating $z$ as a constant gives $\frac{\partial r}{\partial x} = 2x = 4$, which is outside the key range. The other common slip is a sign error in $-\frac{F_x}{F_z}$: here $F_x = -y$, so $\frac{\partial z}{\partial x} = +\frac{y}{3z^2 + y} = -0.5$. Dropping the minus sign gives $+0.5$ and a wrong answer of $3.5$.

## Q.53 NAT · 2 MARKS

Networks (Electric Circuits) › Laws & node/mesh

Q.53 Consider the network shown below with $R_1 = 1\Omega$, $R_2 = 2\Omega$ and $R_3 = 3\Omega$. The network is connected to a constant voltage source of 11V.

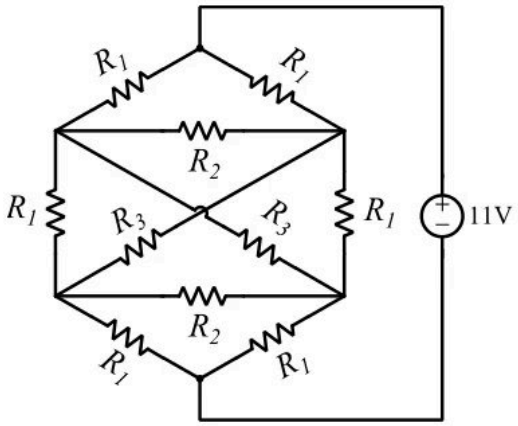


The magnitude of the current (in amperes, accurate to two decimal places) through the source is _____.

EC 16/17

Official answer: **7.9 to 8.1**

**SOLUTION**

1. **Symmetry.** The network is its own mirror image about the vertical line through $A$ and $B$, and the source is connected across $A$ and $B$. So $V_C = V_D$ and $V_E = V_F$.
2. **Branches with no current.** Each $R_2$ joins two nodes at the same potential ($C$–$D$ and $E$–$F$), so each carries zero current and can be removed. Equipotential nodes can also be merged: call $C, D$ node $U$ and $E, F$ node $L$.
3. **The diagonals.** Each $R_3$ runs from the upper pair to the lower pair ($C$ to $F$ and $D$ to $E$), so after merging, both sit between $U$ and $L$. It makes no difference whether the crossing is a junction. The upper half of each diagonal is plain wire, so the crossing point on the $C$–$F$ diagonal is at $V_C$ and the one on the $D$–$E$ diagonal is at $V_D$. These are equal, so joining them changes nothing.
4. **Series–parallel reduction.** Between $A$ and $U$: $R_1 \parallel R_1 = 0.5\,\Omega$. Between $U$ and $L$: $(R_1 \parallel R_1) \parallel (R_3 \parallel R_3) = 0.5 \parallel 1.5 = \frac{0.5 \times 1.5}{0.5 + 1.5} = 0.375\,\Omega$. Between $L$ and $B$: $R_1 \parallel R_1 = 0.5\,\Omega$.
5. **Equivalent resistance.**
$$R_{eq} = 0.5 + 0.375 + 0.5 = 1.375\,\Omega = \frac{11}{8}\,\Omega$$
6. **Source current (Ohm's law).**
$$I = \frac{11\,\text{V}}{11/8\,\Omega} = 8.00\,\text{A}$$

Check: $V_U = 11 - 8(0.5) = 7\,\text{V}$ and $V_L = 8(0.5) = 4\,\text{V}$. The $U$–$L$ drop is $3\,\text{V} = 8 \times 0.375$, which agrees.

**KEY IDEA**

The network is mirror-symmetric about the line through the two source terminals, so the mirror-image nodes are equipotential. The two $R_2$ bridges then carry no current and can be removed, and the symmetric node pairs can be merged. After that, the network is a plain series–parallel chain: $0.5 + (0.5 \parallel 1.5) + 0.5 = 1.375\,\Omega$.

**WATCH OUT FOR**

One mistake is to treat the crossing diagonals as a single junction that splits the $R_3$ resistors differently. Another is to keep the $R_2$ bridges in the calculation and try a full nodal analysis. Both $R_2$ carry zero current by symmetry, and the crossing point is at the upper-pair potential whether or not it is joined, so $R_{eq} = 11/8\,\Omega$. A further slip is combining $0.5 \parallel 1.5$ as $0.5 + 1.5$ or as $1\,\Omega$ instead of $0.375\,\Omega$.

## Q.54 NAT · 2 MARKS

Signals and Systems › Sampling

Q.54 A band limited low-pass signal $x(t)$ of bandwidth 5 kHz is sampled at a sampling rate $f_s$. The signal $x(t)$ is reconstructed using the reconstruction filter $H(f)$ whose magnitude response is shown below:

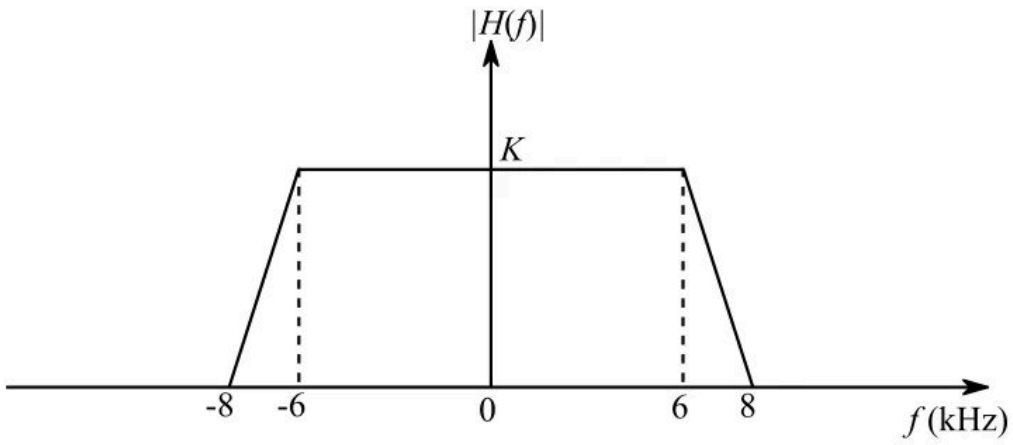


The minimum sampling rate $f_s$ (in kHz) for perfect reconstruction of $x(t)$ is _____.

Official answer: **13**

**SOLUTION**

1. Spectrum of the sampled signal (ideal impulse sampling):

$$X_s(f) = f_s \sum_{n=-\infty}^{\infty} X(f - nf_s)$$

The baseband copy ($n = 0$) occupies $|f| \le 5$ kHz, and the $n$-th copy occupies $[\,nf_s - 5,\ nf_s + 5\,]$ kHz .

2. Condition 1 (the wanted copy is not distorted): the whole baseband $|f| \le 5$ kHz must lie where the gain is constant. The flat region of $H(f)$ is $|f| \le 6$ kHz, so this holds whatever $f_s$ is.
3. Condition 2 (no image leaks through): every shifted copy must lie where $H(f) = 0$, that is $|f| \ge 8$ kHz. In the sloped band $6 < |f| < 8$ kHz the gain is between 0 and $K$, so any image content falling there would appear, attenuated, in the output.
4. The first image ($n = 1$, and by symmetry $n = -1$) is the closest one, so it sets the requirement. Its lower edge must satisfy

$$f_s - 5 \ge 8\ \text{kHz} \ \Rightarrow\ f_s \ge 13\ \text{kHz}$$

For any $f_s < 13$ kHz the band from $f_s - 5$ up to 8 kHz falls on the slope, where $|H(f)| > 0$, so part of the image passes and reconstruction is not exact.

5. Check at $f_s = 13$ kHz: the first image spans $[8,\ 18]$ kHz (and $[-18,\ -8]$ kHz for $n = -1$), where $H(f) = 0$, so it is completely rejected. Higher-order images lie even further out. The filter output is $Y(f) = H(f)X_s(f) = K f_s\, X(f)$, a scaled copy of $x(t)$, so reconstruction is exact.
6. Minimum sampling rate: $f_s = 13$ kHz. This is above the Nyquist rate of $2 \times 5 = 10$ kHz because the reconstruction filter has a 2 kHz transition band instead of a brick-wall cut-off.

**KEY IDEA**

With a non-ideal reconstruction filter you need two conditions. First, the signal band $W$ must sit inside the flat passband ($W \le f_{\text{pass}}$; here $5 \le 6$). Second, the first spectral image must start at or beyond the stopband edge: $f_s - W \ge f_{\text{stop}}$, so $f_s \ge W + f_{\text{stop}} = 5 + 8 = 13$ kHz.

**WATCH OUT FOR**

Answering the Nyquist rate $2W = 10$ kHz ignores the filter's transition band. Other wrong routes: using the passband edge ($f_s - 5 \ge 6$, which gives 11 kHz), which lets the image into the sloped band where $|H(f)| > 0$; or taking twice the filter's stopband edge ( $2 \times 8 = 16$ kHz), which treats the filter as if it were the signal's bandwidth.

## Q.55 NAT · 2 MARKS

Signals and Systems › DTFT & DFT

Let $X[k] = k + 1,\ 0 \le k \le 7$ be 8-point DFT of a sequence $x[n]$, where $X[k] = \sum_{n=0}^{N-1} x[n] e^{-j2\pi nk/N}$. The value (correct to two decimal places) of $\sum_{n=0}^{3} x[2n]$ is _____.

Official answer: **2.90 to 3.10**

**SOLUTION**

1. We need the sum of the even-indexed samples: $S = x[0] + x[2] + x[4] + x[6]$.
2. Pick out the even samples with the selector $\dfrac{1 + (-1)^n}{2}$, which equals 1 for even $n$ and 0 for odd $n$:
$$S = \sum_{n=0}^{7} x[n]\,\frac{1 + (-1)^n}{2} = \frac{1}{2}\left(\sum_{n=0}^{7} x[n] + \sum_{n=0}^{7} x[n](-1)^n\right)$$
3. Put $k = 0$ in the DFT definition: $X[0] = \sum_{n=0}^{7} x[n]$. So the first sum is $X[0] = 0 + 1 = 1$.
4. Put $k = N/2 = 4$: $e^{-j2\pi n(4)/8} = e^{-j\pi n} = (-1)^n$, so $X[4] = \sum_{n=0}^{7} x[n](-1)^n$. So the second sum is $X[4] = 4 + 1 = 5$.
5. Therefore
$$S = \frac{X[0] + X[4]}{2} = \frac{1 + 5}{2} = 3$$
6. Check with the IDFT. Since $x[n] = \dfrac{1}{8}\sum_{k=0}^{7} X[k]\, e^{j2\pi nk/8}$, we get $x[2m] = \dfrac{1}{8}\sum_{k=0}^{7} X[k]\, e^{j\pi mk/2}$, and so
$$\sum_{m=0}^{3} x[2m] = \frac{1}{8}\sum_{k=0}^{7} X[k] \sum_{m=0}^{3} e^{j\pi mk/2}$$
The inner sum is a geometric series with ratio $e^{j\pi k/2}$, whose fourth power is 1. It equals 4 when $k = 0$ or $k = 4$ (ratio $= 1$) and 0 for every other $k$. So $S = \dfrac{4}{8}(X[0] + X[4]) = \dfrac{1}{2}(1 + 5) = 3.00$.

**KEY IDEA**

For an $N$-point DFT with $N$ even, $X[0] = \sum x[n]$ and $X[N/2] = \sum x[n](-1)^n$. Adding them cancels the odd-indexed samples and doubles the even-indexed ones, so the sum of the even samples is $\dfrac{X[0] + X[N/2]}{2}$. You never need to compute $x[n]$ itself.

**WATCH OUT FOR**

Using $X[k] = k$ in place of $k + 1$, which gives $X[0] = 0$ and $X[4] = 4$ and so the wrong answer 2. Another is forgetting to divide by 2, or confusing this with the IDFT factor $1/N$ and writing $(X[0] + X[4])/8 = 0.75$. A third is trying to recover all eight samples $x[n]$ through a full IDFT, which takes time and invites arithmetic slips.

FROM IAE ACADEMY

# Preparing for GATE EC?

IAE Academy teaches GATE EC in Ballygunge, Kolkata, and online. Counselling is free: ask us about batches, fees or your preparation.

FREE COUNSELLING

**Chat on WhatsApp**

**Call +91 84204 36524**

Open every day, 10:30 am to 7:30 pm.

Scan to chat on WhatsApp

THE GATE EC COURSE

Classroom batches in Ballygunge and online batches. Fees and details are on the course page.

Scan: course page

**See the course**

FREE ON IAEACADEMY.IN

More GATE EC papers, question by question with the official answers, and free notes by subject.

Scan: more papers

**More solved papers**

**Found this useful?** Send it to a friend preparing for GATE.

**Send to a friend on WhatsApp**

**IAE Academy free study material.** The questions are those of the GATE EC 2018 question paper, organised by IIT Guwahati; the answers are from its official answer key. Prepared and published by IAE Academy, Kolkata. Free to read and free to share, unaltered and with attribution. Not affiliated with, endorsed by or produced by IIT Guwahati or the GATE committee.

IAE ACADEMY INSTITUTE FOR ENGINEERS

GATE coaching in Kolkata since 2012 · EC, EE, IN, CS and IT, DA, BT and CE · in the classroom and online

227A Rash Behari Ave, Ballygunge, Kolkata 700019

+91 84204 36524 · iaeacademy.in · Updated 27 October 2026

Get directions